INSTALLATION GUIDE

National N-2500 Air

Electric bidet seat · Step-by-step installation

For use by licensed plumbers. Read all steps before starting.



Before you begin

01
Licensed plumber
Install to the PCA. Backflow protection is built in: an integral air gap to AS 2845.2.

02
Water off
Close the water feed valve and drain the toilet cistern before you start.

03
Power point
A 240V earthed power point is required within 1.8 m, on the left-hand side of the toilet.

04
Choose your bolts
Bottom and top fixing bolt sets are both supplied. Use the set that suits your toilet pan.

Check the tap position. Looking at the toilet, the water connection and the 1.8 m power lead are both on the left-hand side. This cannot be changed. If your tap is on the right, you'll need 1 m of ¼" white pipe and 2 x John Guest adaptors. If it's in the cistern, you'll need a ½" internal fitting kit, 1 x John Guest adaptor and 1 m of white pipe.

What's in the box

Lay out every part before starting · per the 2026 manual

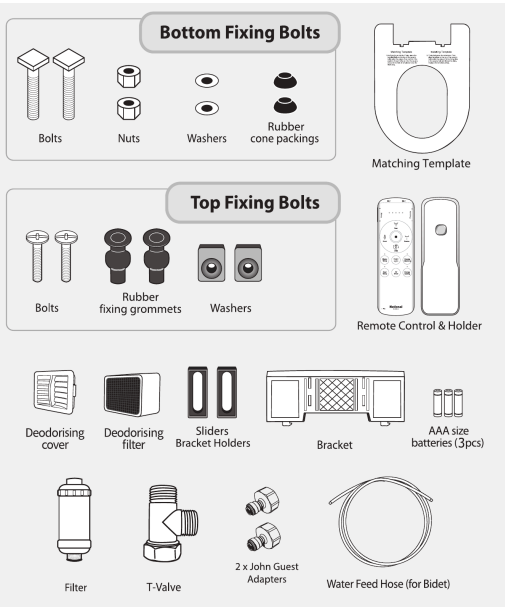

- **National N-2500 Air bidet seat** (Round or U-shaped)
- **Matching template** to check the fit on your pan
- **Bottom fixing bolts:** bolts, nuts, washers, rubber cone packings
- **Top fixing bolts:** bolts, rubber fixing grommets, washers
- **Bracket**, sliders and bracket holders
- **Water connection:** T-valve, filter, 2 x John Guest adapters and water feed hose (for the bidet)
- **Deodorizing** cover and filter
- **Remote control**, holder and 3 x AAA batteries

Water connection & mounting

Steps 1 – 6 · Turn off the water, fit the T-valve and fix the bracket

1

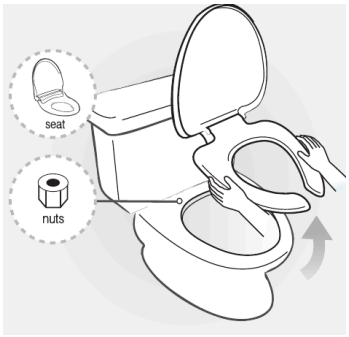

PREPARE

Remove the existing seat

Undo the nuts and remove the old seat and cover. Keep the seat and nuts in a safe place.

2

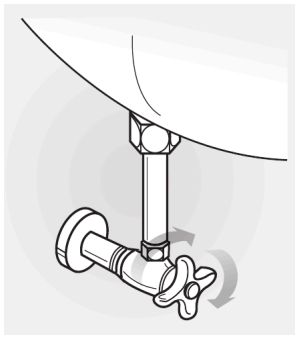

WATER CONNECTION

Turn off the water

Close the water feed valve by turning it clockwise, then flush to drain the toilet cistern.

3

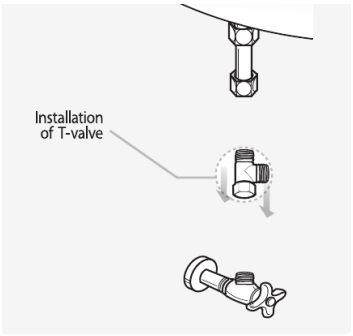

WATER CONNECTION

Fit the T-valve

Remove the existing water feed pipe and keep it safe. Fit the T-valve to the tap.

4

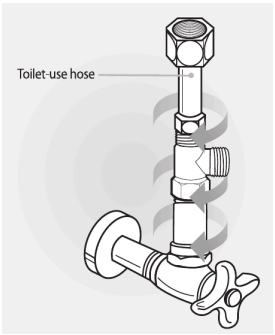

WATER CONNECTION

Connect the toilet hose

Connect the toilet-use hose from the top of the T-valve to the cistern.

5

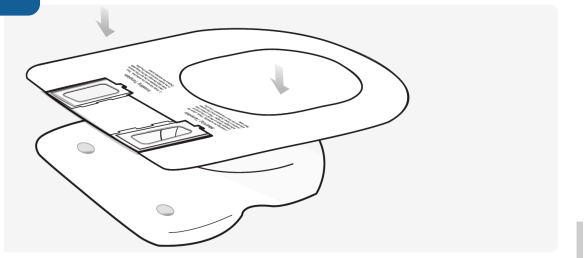

MOUNTING

Check the fit with the template

Lay the matching template flat on the pan, lined up with the edge. Check the bolt holes sit inside the square areas, then fold it on the dotted line, lock the fixing plate in the square hole and remove the template.

6

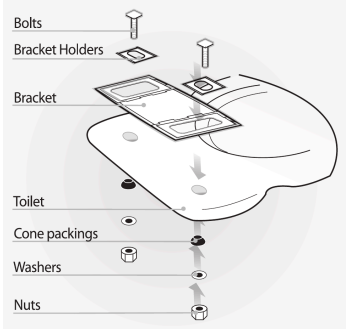

MOUNTING

Fit the bracket – bottom fixing

Place the bracket and bracket holders on the pan and fix with the bolts, cone packings, washers and nuts from underneath. Slide the bracket back or forward to line the seat up with the front of the pan before tightening.

Fit the bidet & trial run

Steps 7 – 12 · Slide the bidet on, connect the filter and check for leaks

7

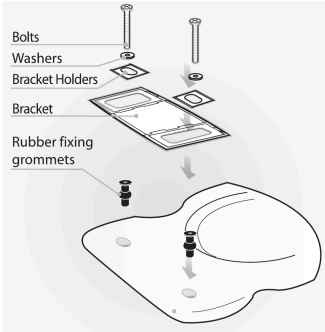

MOUNTING

Or – top fixing

For toilets without access underneath, fix the bracket from above with the top fixing bolts, washers and rubber fixing grommets. Line up with the front of the pan before tightening.

8

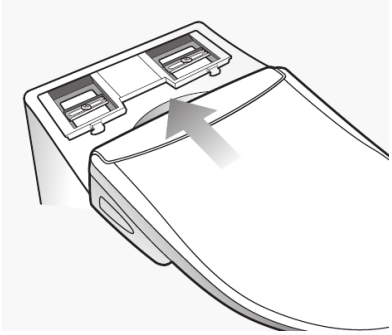

MOUNTING

Slide the bidet on

Push the bidet body onto the bracket until it clicks into place. If it isn't fully home, it may leak.

9

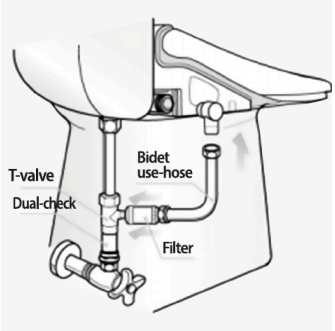

WATER CONNECTION

Fit the filter & bidet hose

Fit the filter to the side outlet of the T-valve, then connect the bidet-use hose from the filter to the bidet using the John Guest adapters.

10

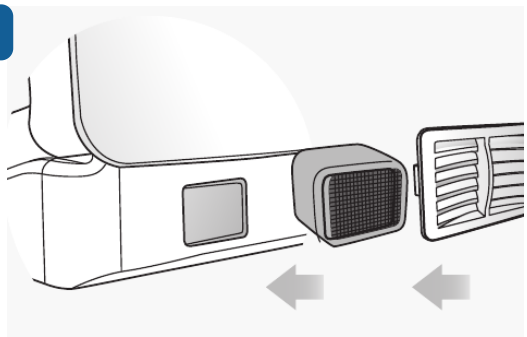

MOUNTING

Insert the deodoriser

Push the deodorising filter into the bidet body, then fit the deodorising cover.

11

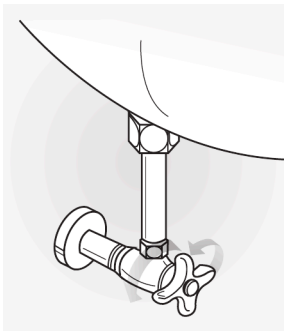

TRIAL OPERATION

Turn the water on

Open the water feed valve by turning it anti-clockwise.

12

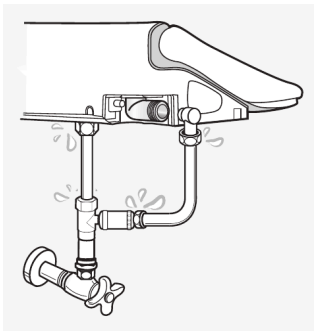

TRIAL OPERATION

Check for leaks

Check there are no leaks around every hose connection.

Sensor & remote control

Steps 13 – 16 · Power up, test the seat sensor and set up the remote

13

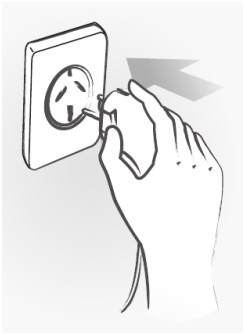

TRIAL OPERATION

Plug in the bidet

Plug into the 240V power point. The logo light on top turns on and the nozzle extends and retracts.

14

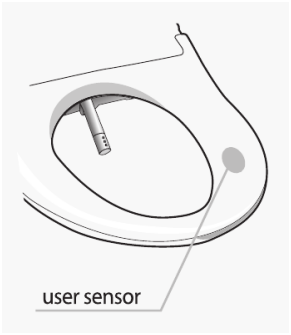

TRIAL OPERATION

Test the seat sensor

Place your hand on the user sensor on the seat. Water should come out of the drain hole for 1–2 seconds.

15

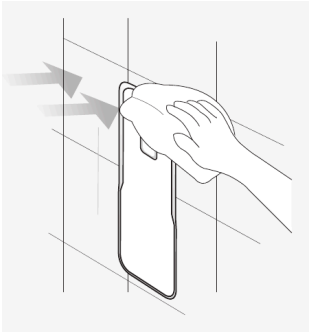

REMOTE CONTROL

Mount the remote holder

Clean the wall thoroughly, remove the adhesive protection from the back of the holder and press it firmly in place.

16

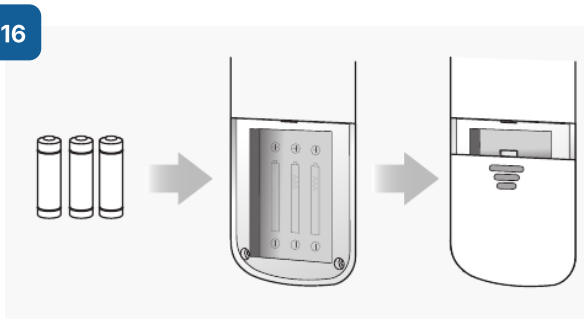

REMOTE CONTROL

Batteries & pair the remote

With the bidet already plugged in, fit the 3 AAA batteries, then press ■ Stop within 10 seconds to pair. A melody confirms it. See page 5 if pairing fails.

Final check

With the water and power on, sit on the seat, run a rear wash and check every connection again for leaks. If the remote doesn't respond after fitting the batteries, unplug the bidet, wait 3 seconds and plug it back in.

Removing the bidet later? Unplug it, turn off the water and drain the cistern. Hold the button on the side of the bidet to drain its tank, then keep holding it while you gently pull the bidet forward off the bracket.

Pairing the remote

The RF remote must be paired with the bidet before the bidet can be used



First-time pairing

1. Plug the bidet into power.
2. Insert the batteries into the remote control.
3. Press ■ **Stop** on the remote within **10 seconds**.

A **red light** shows around the Stop button while the 10-second pairing mode is active, and a melody plays when pairing is complete.

If pairing fails

1

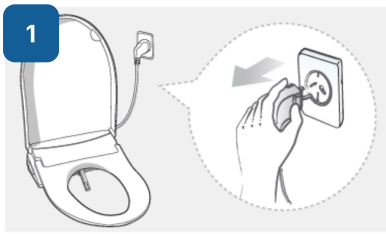

RESET

Batteries out & unplug

Remove the batteries from the remote and unplug the bidet power cord from the wall socket.

2

30
SECONDS

RESET

Wait 30 seconds

Wait about 30 seconds before going on to the next step.

3

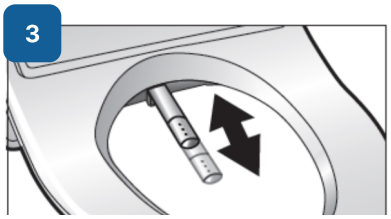

POWER

Plug the bidet back in

Plug the power cord back into the wall socket. The nozzle extends, retracts and a melody plays.

4

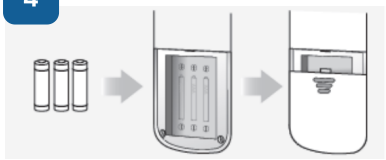

REMOTE CONTROL

Insert the batteries

Remove the back cover, fit the 3 x AAA batteries the right way round and close the cover.

5



PAIRING

Press ■ Stop within 10 seconds

A red light shows around Stop while the 10-second pairing mode is active. A melody confirms pairing is complete.

6

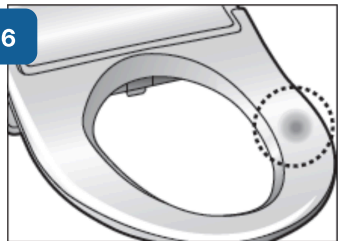

TEST

Test every function

Sit on the seat with skin contact so the seat sensor is activated, then test each function with the remote.

Remote lights not coming on?

Check the batteries are the right way round, or fit fresh batteries (Duracell preferred), then try again.

Still not pairing?

Contact our Customer Care team on **07 5591 7744**. Leaving the seat during any function stops it automatically.

Troubleshooting & reference

Common install issues, specifications and compliance

Troubleshooting

The bidet doesn't start a wash.

The seat sensor must be activated. Sit fully on the seat with skin contact; clothing over the sensor can stop it working.

Leaking at the bidet.

The bidet may not be fully on the bracket. Push it firmly until you hear a click.

Water pressure is weaker than usual.

Debris may be caught in the screen filter in the water inlet. Turn off the water, unplug, remove the filter with long-nose pliers, clean it with a toothbrush and refit.

All the remote's lights are blinking.

The batteries are flat. Replace them all at once; don't mix old and new.

The remote doesn't respond after new batteries.

Unplug the bidet, wait 3 seconds, then plug it back in.

The indicator lights flash in a pattern.

This is an error code. Note which lights are flashing and contact us so we can help.

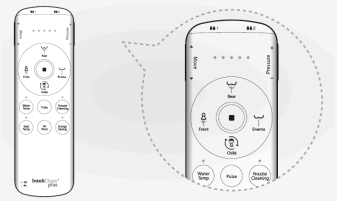

Replacing remote batteries
When all the LEDs on the remote blink, replace the AAA batteries.

Specifications

Model	**National N-2500 Air (R / U)**
Power	**AC 220–240V · 1,430 W max**
Water pressure	**100–680 kPa**
Water supply temp.	**3°C – 40°C**
Power lead	**1.8 m · left-hand side**
Round (R)	**380 × 500 × 102 mm**
U-shaped (U)	**380 × 521 × 99 mm**
Net weight	**Approx. 4.5 kg**
Safe working load	**180 kg**
Remote	**3 x AAA batteries · wall holder**

Backflow & compliance

WaterMarked to WMTS-051:2021. Supplied with backflow prevention: an integral air gap (high hazard) in compliance with AS 2845.2, as per AS/NZS 3500.1. To be installed by a licensed plumber.

WaterMark WMTS-051:2021 · Integral air gap

Need a hand?

Our Australian team is here to help with installation and spare parts.

1300 243 387

sales@thebidetshop.com.au