INSTALLATION GUIDE

National N-1000

Electric bidet seat · Step-by-step installation

For use by licensed plumbers. Read all steps before starting.

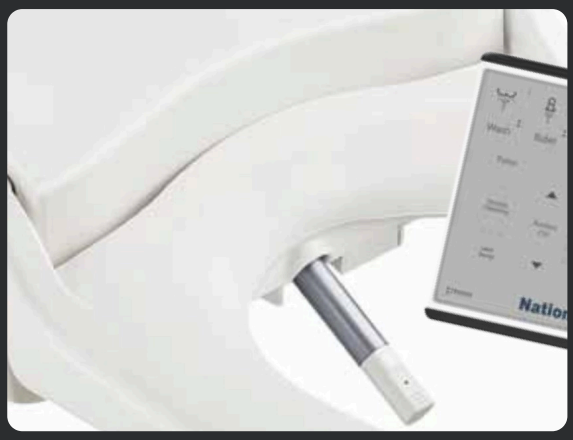

Before you begin

01
Licensed plumber
Install to the PCA and WMTS 051:2016, with backflow protection to NCC Volume Three.

02
Water off
Turn off the water at the wall tap before you start.

03
Power point
A 240V earthed power point is required within 1.5 m, on the right-hand side of the toilet.

04
Don't plug in yet
Only connect power once the bidet is fully installed on the toilet.

Check the tap position. Looking at the toilet, the water connection is on the left and the power lead is on the right. This cannot be changed. If your tap is on the right, you'll need 1 m of ¼" white pipe and 2 x John Guest adaptors. If it's in the cistern, you'll need a ½" internal fitting kit, 1 x John Guest adaptor and 1 m of white pipe.

What's in the box

Plus the N-1000 seat, remote, wall bracket, AA batteries and user's guide

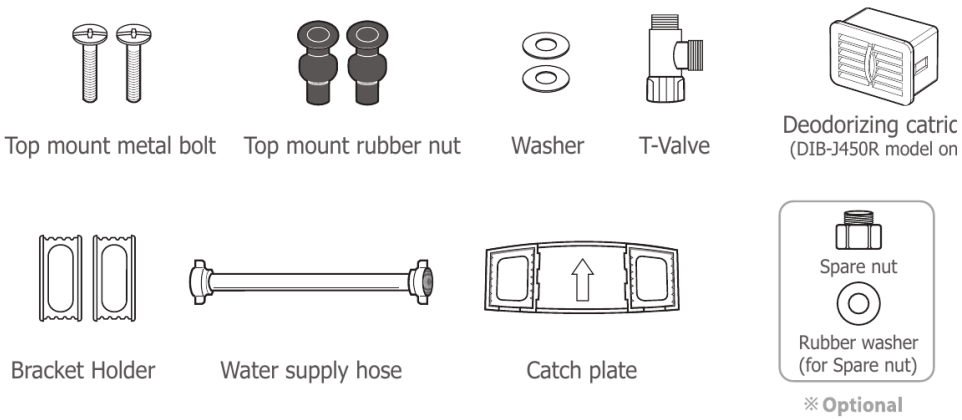

Water connection & mounting

Steps 1 – 6 · Remove the old seat, fit the T-valve and bracket, connect the hoses

1

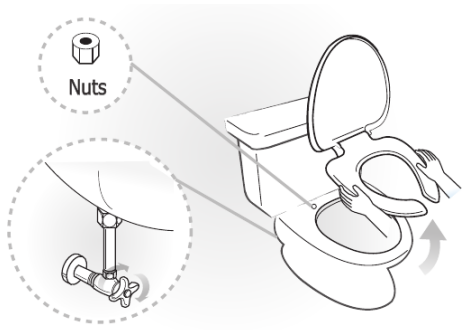

PREPARE

Remove the existing seat

Turn off the water, then undo the nuts and remove the old seat and cover. Keep them somewhere safe in case you need them again.

2

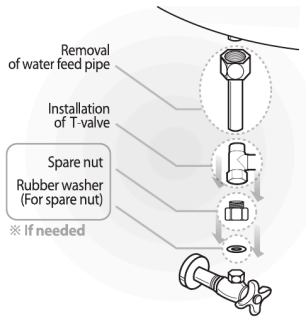

WATER CONNECTION

Fit the T-valve

Remove the water feed pipe from the tap and fit the T-valve. Use the spare nut and rubber washer only if needed.

3

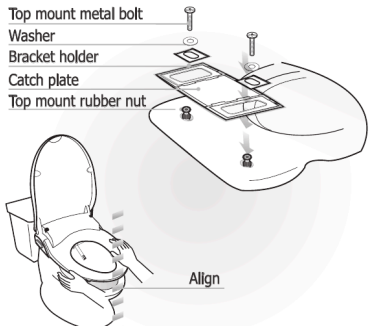

MOUNTING

Fix the bracket

Fit the catch plate and bracket holders with the top mount metal bolts, washers and rubber nuts. Slide the seat back or forward to line up with the front of the pan before tightening.

4

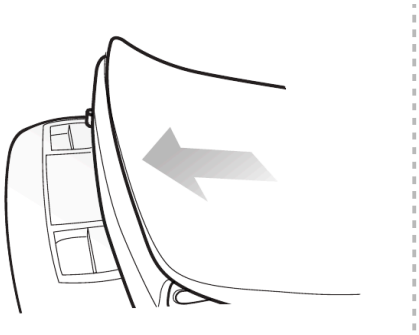

MOUNTING

Push the bidet on

Push the main body onto the bracket until it clicks. If it isn't fully home, the seat may come apart.

5

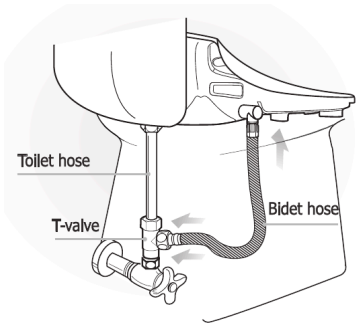

WATER CONNECTION

Connect the hoses

Connect the toilet hose from the T-valve to the cistern and the bidet hose to the bidet, then turn on the water.

6

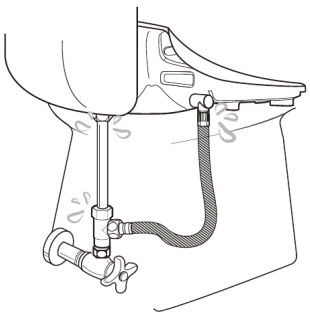

WATER CONNECTION

Check for leaks

Make sure there are no leaks around any hose connection.

Remote & trial run

Steps 7 – 10 · Set up the remote, fit the deodoriser and power up

7

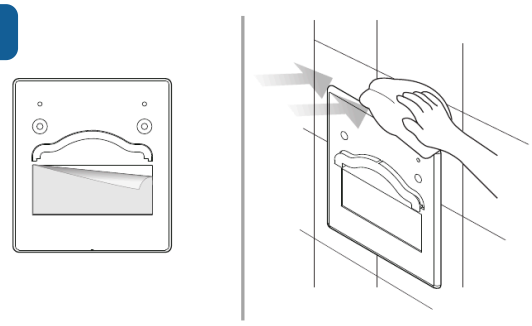

REMOTE CONTROL

Mount the remote bracket

Clean the wall thoroughly, remove the adhesive protection and stick the remote bracket somewhere visible and reachable from the toilet.

8

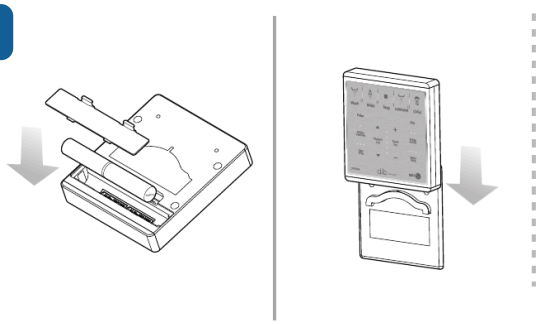

REMOTE CONTROL

Insert the batteries

Fit the two AA batteries (included) as shown inside the battery compartment, then place the remote in its bracket.

9

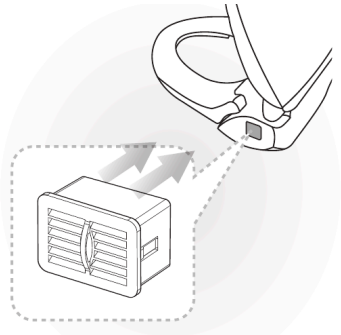

MOUNTING

Fit the deodoriser

Insert the deodorizing cartridge into the bidet body (if supplied

10

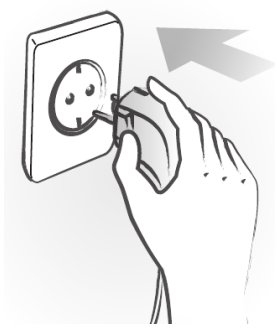

TRIAL OPERATION

Plug in

Plug into the 240V power point with dry hands. Check the nozzle

Final check

With the water and power on, sit on the seat, run a wash and check every connection again for leaks. If more than one bidet is installed nearby, set a remote ID (see the remote control guide).

Removing the bidet later? Unplug it and close the water valve. Press the lever plate and gently pull the bidet forward off the catch plate. Use a coin to open the drain plug and empty the tank.

Troubleshooting & reference

Common issues, error lights, specifications and compliance

Troubleshooting

Completely out of order.
Check the power plug is connected and the power point is working.

Water doesn't spray out.
Check the water is on, the valve isn't closed, the nozzle isn't blocked and the hose isn't bent. You must be seated.

Water pressure is low.
Check the screen filter isn't blocked, and that pressure isn't set too low.

Water or seat isn't warm.
Check the temperature isn't set to off or low, or that energy saving mode isn't on.

Water temp lights all blinking.
Check the water supply, then unplug and plug the bidet back in.

Tank drains on its own.
The automatic tank draining feature is on. It drains after 48 hours without use.

Other blinking light patterns.
These are self-diagnosis codes for the temperature sensors. Note which lights are blinking and contact us.

Specifications

Model	**National N-1000 (Round)**
Remote	**2 x AA batteries · wall bracket**
Rated voltage	**AC 220–240V · 50 Hz**
Max power	**870 W**
Water pressure	**100–680 kPa**
Feed water temp.	**3°C – 35°C**
Power cord	**1.8 m · right-hand side**
Dimensions	**470 × 496 × 178 mm**
Net weight	**4.9 kg**
Safe working load	**180 kg**
Protection	**IPX4**

Backflow & compliance

Conforms to AS 2845.2 Minimum Air Gap / AVB with a supplementary dual check valve. It must be installed with appropriate backflow protection conforming to the National Construction Code, Volume Three, and the PCA.

WaterMark WMTS-051 · Lic 20094 · E5780

Need a hand?
Our Australian team is here to help with installation and spare parts.

1300 243 387
sales@thebidetshop.com.au