National N-2000 E / R / U



Preparation

Installation

Operation

Maintenance & Cleaning

User's Guide Electrical Bidet

Be sure to read this user's guide carefully before use.

220V ~ 240V, 50/60Hz

nationalbidet.com

National

N-2000 Super Slim

Please Scan for

Installation videos,
user guides,
Warranty information
& customer support.

WMTS 051
20094

E5780

JAS-ANZ

ABCB

IPX4

WARNING: THIS TOILET DOUCHE SEAT MUST BE INSTALLED WITH APPROPRIATE BACKFLOW PROTECTION CONFORMING TO THE NATIONAL CONSTRUCTION CODE – VOLUME THREE AND THE PCA.

National . . .

THIS UNIT WAS MANUFACTURED FOR HOUSEHOLD USE ONLY.
READ ALL OPERATING INSTRUCTIONS BEFORE INSTALLATION.

Notes

1. This product should be installed according to this manual.
2. Please read this manual carefully and install properly.
3. Please save this manual and place an easily accesible location.
4. Do not attempt to service this appliance yourself. Doing so could void warranty.

CONTENTS

1. Safety Instruction 4
2. Product Characteristic 8
3. Designation of Each Component 9

4. Installation 13
5. Trial Operation 19
6. Disassembly of Product 20

7. How to Use the Product 22
8. Maintenance & Cleaning 30

9. Error code 32
10 Product Specifications 33
11. Comparison Chart 34
12. Dimension 35
13. Warranty & Support 36

01.Safety Instructions

● Each symbol refers to the followings:

⚠ Warning	Risk of electric hazard when violating the instructions
⚠ Caution	Risk of injury or material damage when violating the instructions

● Each pictorial indication means the followings:

means prohibited

- Disassembly is not allowed
- Don't touch with wet hand
- Use of fire prohibited
- Don't spray water
- General prohibition

means obligated

- Obligatory Instruction
- Grounding Connection

⚠ Warning

Disassembly, modification or repair is not allowed.

▶ Risk of electric shock or fire.



Don't plug or touch
the power cord with wet hands.

▶ Risk of electric shock.



Don't spray water on the main body
of product or power plug.

▶ Risk of electric shock or fire



Don't use the damaged power cord or outlet.

▶ Risk of electric shock or fire



⚠Warning

Don't fail to do grounding.

- Always use the outlet that encloses the earth electrode (Earth terminal mounting outlet-check if there is earth or not).
- In case there is no earth electrode, do grounding separately.
- When it is not grounded, it causes the failure and electric shock.





Insert the power plug correctly in 240V exclusive outlet.

- Risk of heat or fire.





Don't use cigarettes or flammable materials near the product ; Don't throw the cigarette into the product.





Don't connect the product to industrial water pipe.

- Risk of causing dermatitis of user.



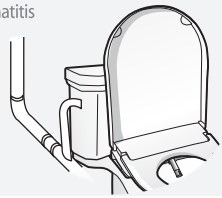

Don't connect power to the product before its complete installation on the toilet.





When the power cord or plug is damaged, always inform the service center, and replace if required.





Don't block the dryer hole nor put any object or hand on the hole.

- Risk of burn or electric shock.





When removing the product from toilet, always unplug the power first.

- Risk of electric shock.





01.Safety Instructions

⚠Caution

Don't stand on the product ; don't put heavy object on it.

▶ Risk of injury or damage to the product.



Don't force to close the cover of toilet.

▶ Risk of failure.

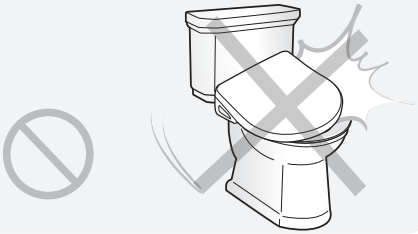

Don't lean against the cover of toilet.

Risk of failure.
Can cause cracking of seat and hinge failure



When cleaning, use dish detergent onl .
No benzene, thinner, toilet-use detergent, cream/abrassive cleaners etc.

▶ Risk of damage to the product or crack or staining.



Don't bend the connecting hose ; don't force to pull it out.

▶ It may cause stoppage of water supply or leakage.

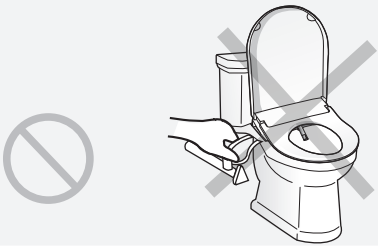

Be cautious low temperature burn.

▶ When the skin has been in contact with a seat for a long time, it may cause low temperature burn. The seat temperature should be set on Low or off when the unit is used for children, elderly persons, persons who cannot control the temperature by themselves.



⚠Caution

When the product is not used for an extended period of time, remove the power plug and drain the water out of the product tank and water off at the wall.

- It may cause the water rotten and result the skin disease.



Don't use an out of order/faulty product.

- When it is out of order, remove the plug from the outlet and inform the service center.
- Otherwise, it may cause fire or electric hazard.



When installing, push it in until it sounds 'Click'.

- It may cause water leakage or mal-operation.



Don't place the removed product upside down.

- Risk of the product failure.



⚠ Warnings

This appliance is not intended for use by persons (including children) with reduced physical, sensory or mental capabilities, or lack of experience and knowledge, unless they have been given supervision or instruction concerning use of the appliance by a person responsible for their safety.

Children should be supervised to ensure that they do not play with the appliance

02. Product Characteristics

bidet has the following characteristics:

Continuous Warm Water Supply

Enjoy continuous warm water throughout the wash cycle.



Enema Wash

Soft but powerful water wash for added cleansing benefit.



Bubble Wash

Aerated water wash adds cleaning comfort.



Massage

Nozzle moves back and forth for massage effect.



Pulse

Pulsating wash repeatedly cycles from weak to strong.



Deodorization Function

Deodorizing filter provides odor-free during use.

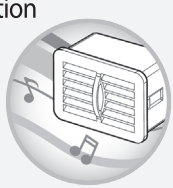

Energy Saving Function

It finds out the time frame when used frequently, realizing the maximum energy saving effect.



Child Settings

Specialized nozzle position and water pressure for children.



Touch panel remote control

Convenient touch screen remote control provides easy user interface.



User Preset

User can preset and store the memory for control setting

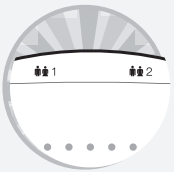

03. Designation of Each Component

Main Body

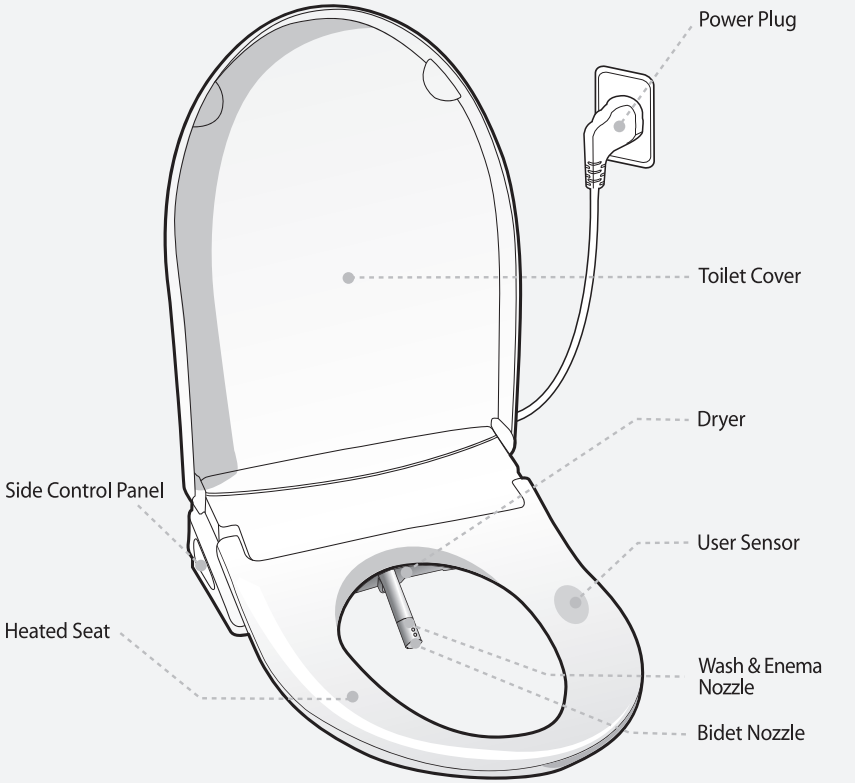

※Occupied seat sensor

• The occupied seat sensor must be activated to operatthe product. Sensor can be turned deactivated.

Check if the bidet fits your toilet

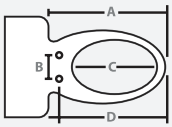

Round Seat

This Bidet will fit on your existing toilet suite if the measurements of your pan are:

- A: 495mm or above
- B: Between 135-195mm
- C: 335mm or above
- D: Between 425-475mm

'U Shaped' Seat

This Bidet will fit on your existing toilet suite if the measurements of your pan are:

- A: 515mm or above
- B: Between 135-195mm
- C: 345mm or above
- D: Between 440-490mm

Elongated Seat

This Bidet will fit on your existing toilet suite if the measurements of your pan are:

- A: 520mm or above
- B: Between 135-195mm
- C: 355mm or above
- D: Between 445-495mm

03. Designation of Each Component

Remote Panel

To control the nozzle position.

• Rear wash
•• Rear wash oscillation
— 2X rear wash mode

Rear
To run the wash function.
(2 minutes)

Stop
To stop any operations.

• Front wash
•• Front wash oscillation
— 2X front wash mode

Front
To run the bidet function.
(2 minutes)

Pulse
To run the Pulse function during Wash/Bidet/ Enema Wash.
Water pressure is rhythmically changed from strong to weak.

Water Temp
To control water temperature.
(off/low/mid/high)

Seat Temp
To control seat temperature.
(off/low/mid/high)

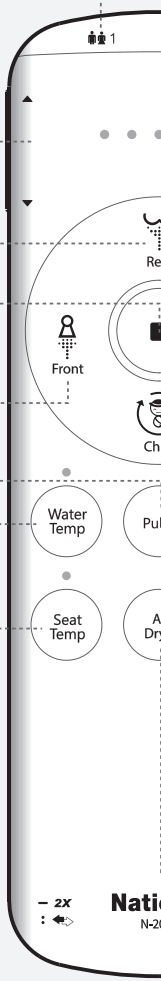

• Select once / •• Select once again

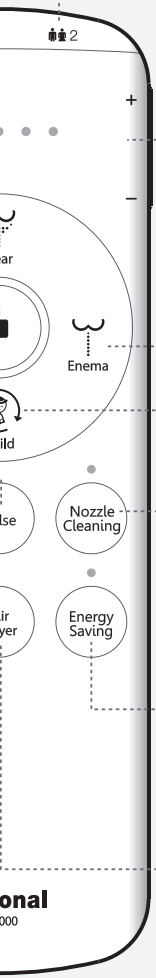

USER PRESET

User can preset and store the memory for control setting.

+/-

- To control water pressure.
- To control dry temperature

Enema

To run the Enema wash (2 minutes)

Child

Children safety and automatic mode.

Nozzle Cleaning

Selecting nozzle cleaning while not seated, the nozzle cleans itself 3 times. Then nozzle extends and stops for manual cleaning process.

Energy Saving

Automatic mode.
Learning energy saving mode.
Releasing energy saving mode.

Air Dryer

Start Dry function.
(3 minutes)

/ − Select and hold for 3 seconds

03. Designation of Each Component

Operation Panel

Depending on the toilet pan style use either suuplied '**Bottom Fixing Bolts**' or '**Top Fixing Bolts**'.

Bottom Fixing Bolts

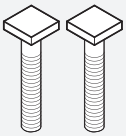
Bolts


Nuts


Washers


Rubber cone packings

Top Fixing Bolts

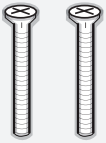
Bolts

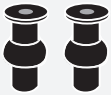
Rubber fixing grommets


Washers


Remote Control & Holder


Deodorizing cover

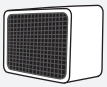
Deodorizing filter

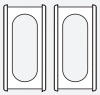
Sliders Bracket Holders

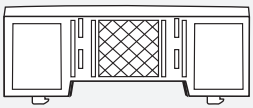
Bracket


AAA size batteries (3pcs)


Filter

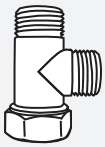
T-Valve


2 x John Guest Adapters

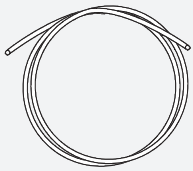
Water Feed Hose (for Bidet)

04. Installation

Order of Installation

1 Remove the seat from the existing toilet body.

- Release the nuts, and then remove the seat and cover from it.
- Keep the removed seat, cover and nuts well in a proper place.



2 Close the water feed valve by turning it clockwise, and then drain the toilet water tank out.

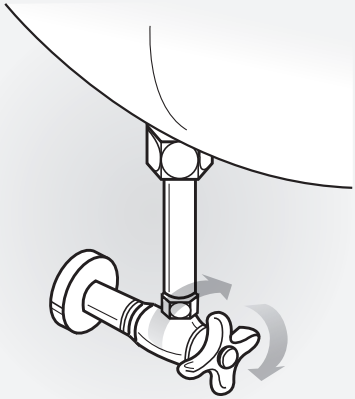

3 Remove the water feed pipe and then install T-valve.

- Keep the removed water feed pipe well in a proper place. It may be useful when moving house to other place later.

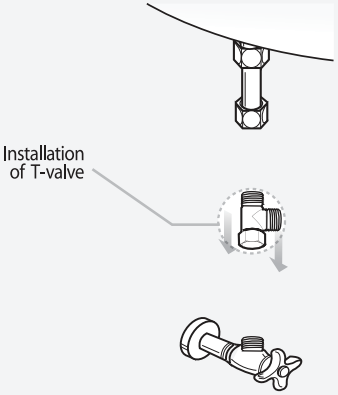

4 Connect the toilet-use hose.

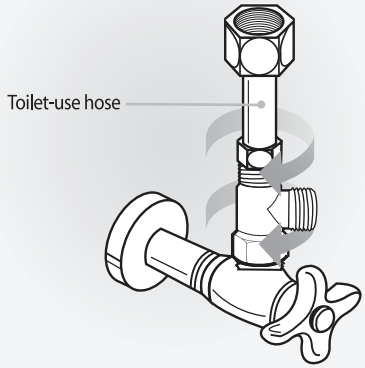

04.Installation

5 Fix the bracket onto the toilet first.
If 'Top Fixing Bolts' are required,
see 'Accessories List'.

BOTTOM Fixing Bolts

- If 'Top Fixing Bolts' are needed then see 5a
- Adjust the seat and the front part of toilet back and forth so that they can correspond with before fastening the nuts.

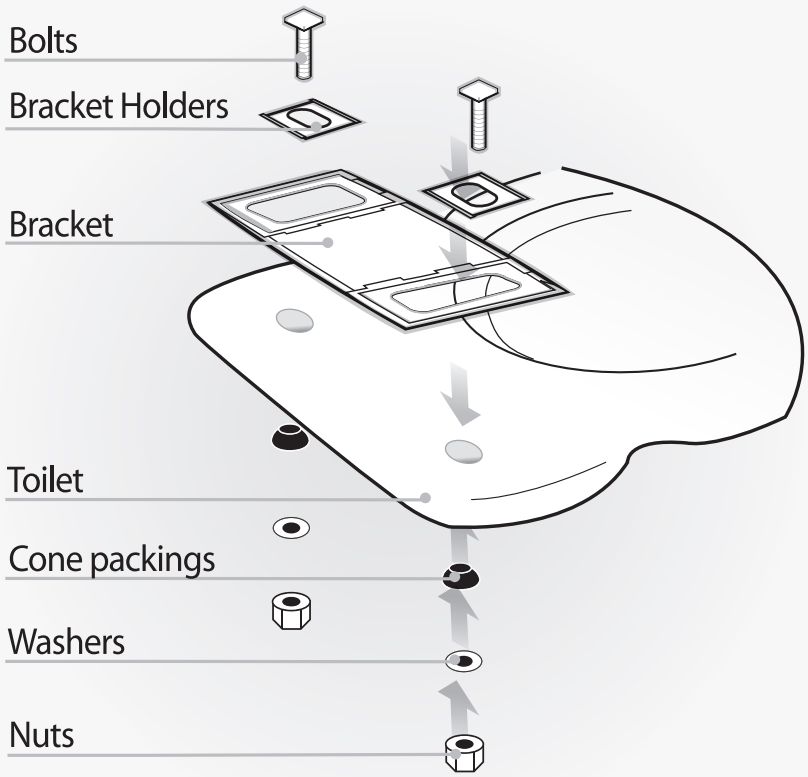

5a If 'Top Fixing Bolts' are required then fix the bracket onto the toilet first with these.

TOP Fixing Bolts

▶ Adjust the seat and the front part of toilet back and forth so that they can correspond with before fastening the nuts.

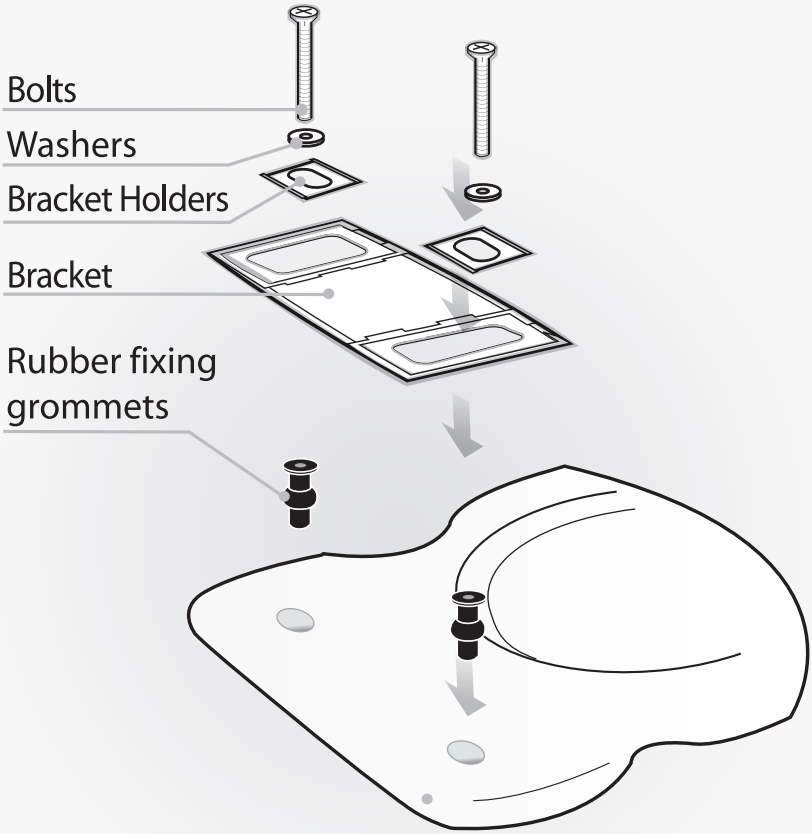

04. Installation

6 Push the main body toward the bracket completely.

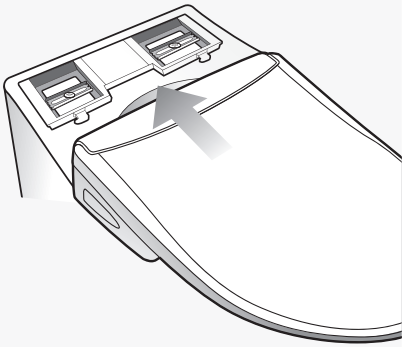

- Push it in until it sounds 'click'.
- When the product is not installed well, it may cause leakage.

7 After installing the filter onto the T-valve, connect the bidet-use hose to the bidet body using the John Guest Adapters.

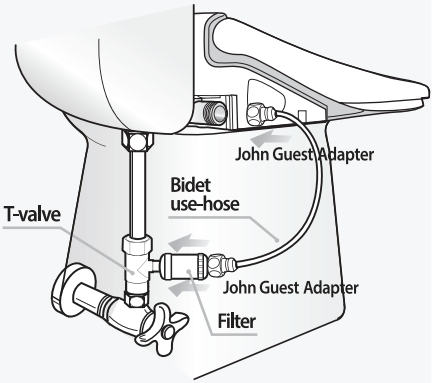

8 Insert the deodorizing cartridge into the bidet body.

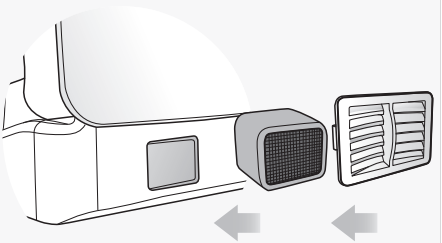

04. Installation

Remote control installation & batteries insertion

1 Remove the adhesive protection to attach the remote control bracket.

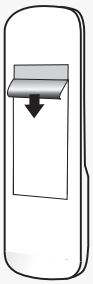

2 Clean the place thoroughly to attach the bracket.

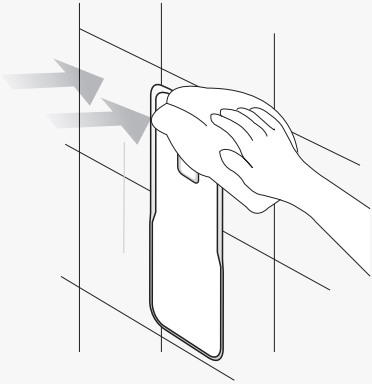

3 Remove the back cover and place supplied batteries with correct direction.
Close the back cover.

※ **Caution**
Failure to install the batteries properly could cause damage or faillure of the remote control unit.

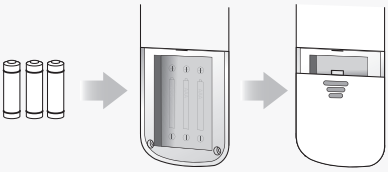

4 Place the remote control in the bracket with correct direction.
When placing it, take care to hang it on the bracket completely. Failure of placing could cause the remote control falling down.

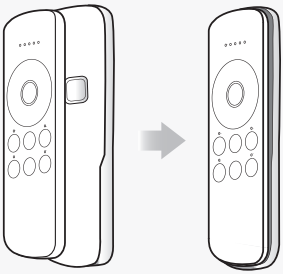

04. Installation

5 When the batteries have reached the end of service life, all LEDs will blink.
Replace the batteries with new ones, AAA size X 4pcs.

※ **Caution**
Do not use old and new batteries together.
This could cause damage or failure of the remote control.





6 If the unit does not work after replacing the batteries, unplug and wait for 3 seconds.
Plug in again, and the unit will be ready for use.

※ After replacing the batteries, ID of the unit will be initialized as "00" (factory initialization ID), and its ID will be equalized ID of the remote control that reaches the unit first.
This ID assigning function will be needed to prevent signal interruption if more than 2 units are used at one place. In case of using one unit only, user can use the unit accordingly without setting.

※ If you want to change the ID, please refer to the page 22. for "Remote Control ID Setting"

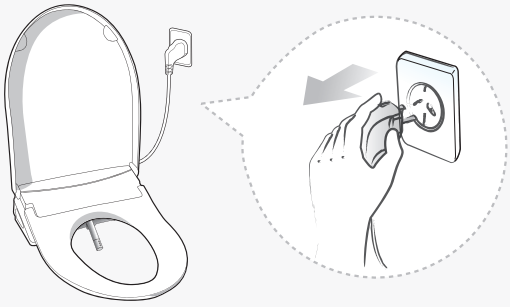

05. Trial Operation

Order of Trial Operation

1 Open the water feed valve by turning it anti-clockwise.

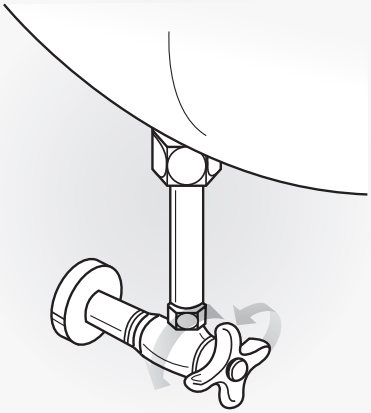

2 Be sure of no leakage around the hose connection.

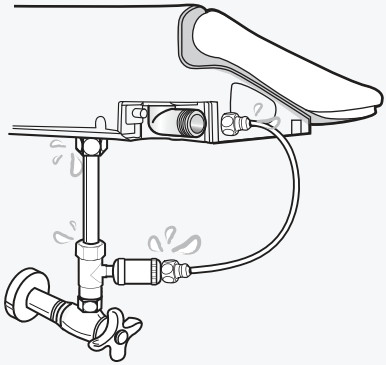

3 Be sure that logo light on the top turns on and nozzle comes and retracts when powered on.

▶ Don't plug the power cord with wet hands. Risk of electric shock.

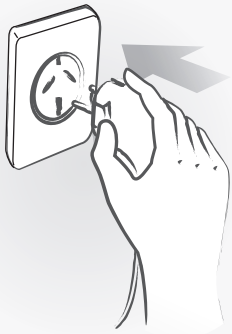

4 Put the hand on the user sensor part of the seat, check if water comes out from drain hole for 1~2 seconds .



06 Disassembly of Product

Order of Disassembly

1 Remove the power plug from the outlet.

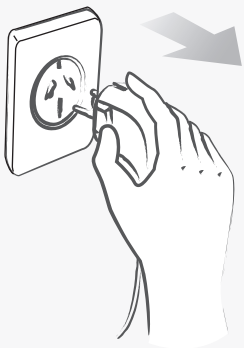

2 Close the water feed valve by turning it clockwise, completely drain out the toilet water tank, release the nuts at bidet body of the bidet hose, and then remove them from main body.

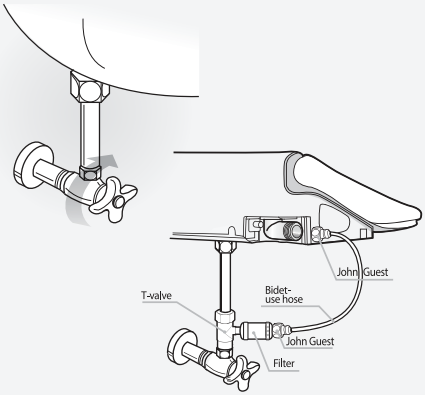

3 Press the button on the side of bidet, completely drain the water out of the of the main body. While keep on pressing the button, pull the main body forward, and then remove it from the toilet.

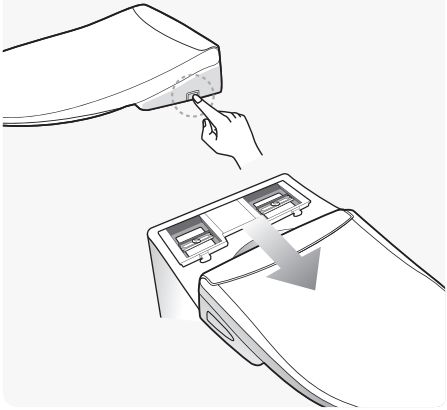

4 Release the nuts, and then remove the brackets from the toilet.

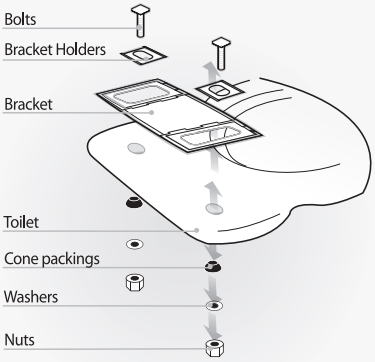

5 Remove bidet hose, toilet-use hose and T-valve.

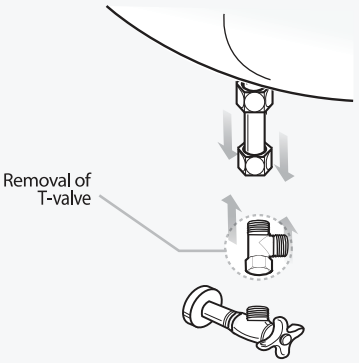

6 Connect the water feed pipe that was removed when the bidet was installed.

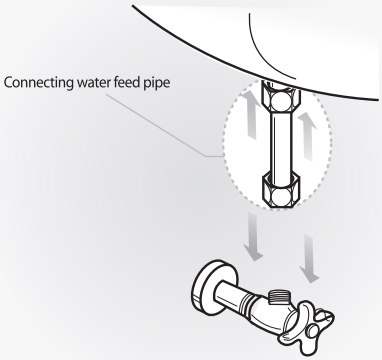

7 Open the water feed valve by turning it anti-clockwise. Be sure of no leakage around the water feed connection.

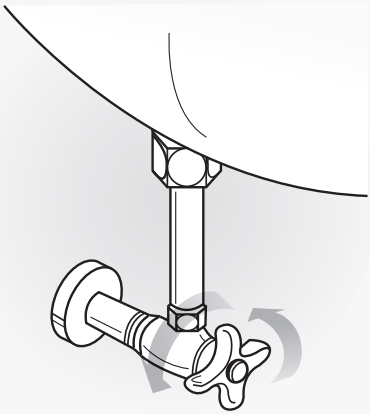

8 Attach to the toilet the seat and cover that were removed when the bidet was installed.



07.How to Use the Product

Basic Operation Method

1 Occupied seat sensor (getting started)

- Sit on the seat to ensure skin contact on the seat sensor.
- Clothes or other materials except for skin contact on the sensor may interrupt the bidet seat operation.
- Once the contact is made the water pressure indicator lights will turn on.
- Leaving the seat during use will stop the operation.



2 Stop

- Stops all wash and dry functions currently operating (Side arm/Remote control)
- Gently touch for a second any parts of the dotted area to stop the wash cycle. (Auxiliary panel)

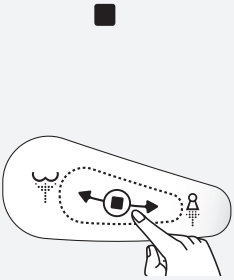

3 Rear wash / Front wash / Enema wash

- Select once to initiate a rear/front/turbo wash. The nozzle will be self-cleaned before/after wash operation. (Turbo wash is not available with the auxiliary panel.)
- Select once again to initiate nozzle oscillation. To stop the oscillation, choose again. The oscillation at Turbo wash is not available for safety.
- Do not use a Turbo wash excessively and consult with a doctor first if you have any anal disease or you are sensitive.
- For water temperature when using in a cold environment, refer to the cautions in this manual.
- Swipe finger toward the front to initiate a front wash. Swipe finger toward the front again to initiate an oscillation. (Auxiliary panel only)



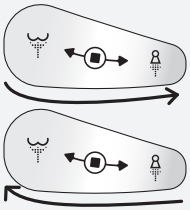

1. After enema wash, eliminate the water from your rectum completely.
2. If the concentrated water stream is not pointing at the center of posterior, it may bring some pain or water splashes abnormally.
3. If the anal disease patient uses enema function, it may bring some pain or bleeding for the first several times.
4. Excessive use of enema wash may aggravate constipation.

4 2X mode

- If the stronger water pressure is preferred while a rear/front wash, select and hold a button for 3 seconds to change to 2X mode. 2X mode starts from Level 3 regardless previous setting.
- Select and hold a rear/front wash button for 3 seconds to initiate 2X mode rear/front wash.
- Select once again to initiate nozzle oscillation.
- To cancel the oscillation, select again.
  To cancel 2X mode, select and hold a rear/front wash button for 3 seconds.
- Do not use 2X mode wash excessively and consult with a doctor first if you have any anal disease or are sensitive.
- For warm water temperature when using in a cold environment, refer to the cautions in this manual.

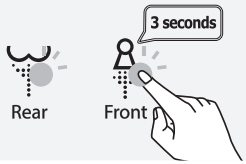

5 Child wash (automatic wash)

- Select a Child wash button to initiate an child wash that offers from the wash until the drying function for children and seniors.
- Rear wash 20 seconds → Rear wash oscillation 20 seconds → Rear wash oscillation with pulsation for 20 seconds → Dry for 2 minutes will consecutively work.



6 Air Dryer

- Select a dry button to initiate a 3 minutes air dryer cycle. Dryer air temperature can be adjusted by +/- button. (5 levels)
- For dryer air temperature when using in a cold environment, refer to the cautions in this manual.

Air Dryer + −

7 Pulsation

- Select a pulsation button to initiate pulsation while rear/front/turbo is running that enables the water to repeatedly increase and decrease in pressure in a pulsating pattern.
- To cancel pulsation, select the pulsation button again.

Pulse

8 Water pressure

- Select a rear/front/turbo wash button to adjust water pressure by +/- button. (5 levels)
  If you feel that the water pressure is weaker than usual, there may be small debris stuck in the water supply screen filter or inline filter. Refer to maintenance instructions in this manual.

+ −

9 Nozzle position

- Select ◀/▶ during a wash cycle to adjust the nozzle position forward and backward.
- The 5 LED indicator lights will indicate different positions selected.
  Settings will be saved for the next use.

◀ ▶

07. How to Use the Product

Basic Operation Method

10 Seat temperature

- Select a seat temperature button to adjust the seat temperature to 1 of 4 settings.
- Room temperature/off → low/green(34℃/93.2℉) → medium/yellow(37℃/98.6℉) → high/red(40℃/104℉)
- Settings will be saved for the next use.
- If the seat is used 15 minutes consecutively when the seat temperature is set at medium and high, the seat temperature will be lowered automatically down to 35℃/95℉ by 1℃/1.8℉ every 5 minutes.
- For safety, this bidet seat uses a low voltage for a heated seat. It may take a little while to be heated at the beginning.

Seat
Temp

11 Water temperature

- Select a water temperature button to adjust the seat temperature to 1 of 4 settings.
- Room temperature/off → low/green(34℃/93.2℉) → medium/yellow(37℃/98.6℉) → high/red(40℃/104℉)
- Settings will be saved for the next use.
- This bidet seat is an instant heating system with the latest technology applied, and it does not consume any electricity for the water heating in standby mode, saving electricity.
- If the bidet seat is used in a very cold area with high water pressure, the warm water may not reach the set temperature. Refer to the precaution in this manual.

Water
Temp

12 Deodorizer ※ Applicable models only

- The deodorizer starts automatically when a user sits on the seat. It continues to run for one minute after the seat has been vacated.
  The deodorizing cartridge is semi-permanent but needs to be cleaned regularly with a brush.

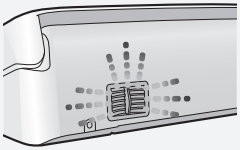

13 Multicolored night light

- Select a nozzle cleaning button repeatedly to change the color of the night light 1 of 7 colors while the seat is occupied.
- The default color is white and can be changed in the following order.
- Pure white → Sky blue → Pretty yellow → Princess pink → Hot red → Sea blue → Forest green → Off
  The night light dims during the Energy saving mode 2 and when a user sits on the seat, it becomes bright and dims back after leaving the seat.

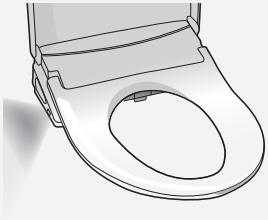

Nozzle
Cleaning

14 Energy saving

- Select the Energy saving button once to initiate the Energy saving mode 1. Select it again to initiate the Energy saving mode 2. To cancel the Energy saving mode, select it once again after the Energy saving mode 2.
- No energy saving (off) → Energy saving mode 1 (green) → Energy saving mode 2 (red)

Energy saving mode 1 (regular saving)

Seat temperature is lowered as below and goes back to the previous set temperature automatically as soon as the seat is occupied.
- Low temperature (34°C/93°F) → (28°C/82°F)
- Medium temperature (37°C/99°F) → (30°C/86°F)
- High temperature (40°C/104°F) → (32°C/90°F)

Energy saving mode 2 (powerful saving)

Seat heating is turned off regardless of the current temperature setting and goes back to the previous set temperature automatically as soon as the seat is occupied. After a seat is unoccupied, it returns to Energy-saving mode.
The night light dims during the Energy saving mode 2 and when a user sits on the seat, it becomes bright and dims back after leaving the seat.

Energy
Saving

15 Nozzle cleaning

- There are two ways to initiate nozzle cleaning.

Nozzle cleaning 1 (nozzle body care)

Select Nozzle cleaning for a second while not seated. Nozzle extends toward and self-clean 3 times with cold water. It retracts when finished. Pressing Stop at any time to cancel the nozzle cleaning process.

Nozzle cleaning 2 (Nozzle tip intensive care)

Select and hold the Nozzle cleaning button for 3 seconds while not seated. Nozzle extends toward and nozzle tip will be self-cleaned for 40 seconds with hot water.

- It stays extracted for user's manual cleaning for 5 minutes and retracts automatically.
- Select the Nozzle cleaning button again to retract the nozzle if the cleaning process is finished earlier.
- Select the Nozzle cleaning button while the nozzle tip is being self-cleaned, and self cleaning is canceled and extracts promptly for user's manual cleaning.





07.How to Use the Product

Basic Operation Method

16 User preset

- You can program your preferred settings for two users. Follow the steps below to program and use the memory function.
- Water temperature, seat temperature, water pressure, nozzle position, and dry temperature can be stored.
- Use the bidet seat with your preferred settings first and select and hold one of the user preset buttons for 3 seconds. Settings will be saved with 1 beep.
- Settings can be overwritten on the current presets. In this case, old settings are deleted and new settings are saved.
- Select the user preset 1. 2 LEDs(green/red) of Energy saving light on and only green LED blinks once altering you that user memory 1 is activated.
- Select the user preset 2. 2 LEDs(green/red) of Energy saving light on and only green LED blinks twice altering you that user memory 2 is activated.

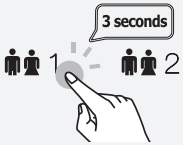

17 Factory default reset

- To reset the bidet seat back to its factory default settings, select the stop button 4 times within 2 seconds to clear all current settings.
- A factory reset can only be performed when the seat is not occupied.
- A tone will be heard to confirm that the bidet seat has been initialized.



18 Sleep mode

- Select and hold Energy-saving for 3 seconds to enter Sleep mode regardless of the seat sensor occupation. Select Energy-saving again for a second to cancel the sleep mode.



Expert mode

1 Entering & canceling Expert mode

- Select and hold Nozzle Cleaning for 2 seconds while Stop is selected and held to enter/cancel the expert mode.
- Nozzle Cleaning LED blinks to indicate Expert mode has been entered.
- The seat sensor is automatically overridden and, if the overriding is not canceled forcibly, it is canceled after 20 minutes automatically.

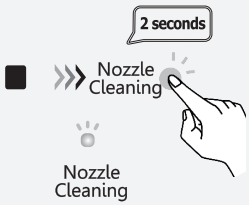

2 Seat occupy sensor overriding and canceling

- After entering Expert mode, touch a seat sensor area to deactivate the seat sensor override. 5 LEDs of water pressure/nozzle position are turned off to indicate that the seat sensor override is deactivated.
- Touch the seat sensor again to activate the seat sensor override. 5 LEDs of water pressure/nozzle position turn on to indicate that the seat sensor override is activated.

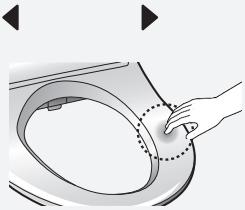

3 Wash cycle change

- Deactivate the seat sensor override.
- Select Water temperature while Rear wash is selected and held.
- Color of Water temperature LED is changed sequentially.1min (off) → 2min (low/Green blinks) → 3min (medium/yellow blinks) → 5min (high/red blinks).
- Cycle of front wash and Turbo wash can be changed in the same way.
- Default cycle is 2 minutes.

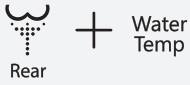

4 Dry cycle change

- Activate the seat sensor override.
- Select Water temperature while Dry is selected and held.
- Color of Water temperature LED is changed sequentially.1min (off) → 2min (low/Green blinks) → 3min (medium/yellow blinks) → 5min (high/red blinks).
- Default cycle is 3 minutes.



07. How to Use the Product

Expert mode

5 Child wash cycle change

- Deactivate the seat sensor override.
- Select Water temperature while Child wash is selected and held.
- Color of Water temperature LED is changed sequentially. 30sec (off) → 60sec (low/Green blinks) → 120sec (medium/yellow blinks) → 180sec (high/red blinks)

  30sec (off) : 10sec front wash → 10sec front oscillating wash → 10sec front oscillating/pulsating wash

  60sec (off) : 20sec front wash → 20sec front oscillating wash → 20sec front oscillating/pulsating wash

  120sec (off) : 40sec front wash → 40sec front oscillating wash → 40sec front oscillating/pulsating wash

  180sec (off) : 60sec front wash → 60sec front oscillating wash → 60sec front oscillating/pulsating wash
- Default cycle is 60 seconds.

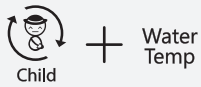

6 Dry cycle change at Child wash

- Deactivate the seat sensor override.
- Select Seat temperature while Child wash is selected and held.
- Color of Seat temperature LED is changed sequentially. 30sec (off) → 1min (low/Green blinks) → 2min (medium/yellow blinks) → 3min (high/red blinks). Default cycle is 2 minutes.

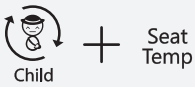

7 Automatic deodorize on/off

- This feature can be set regardless seat sensor override.
- Select Water temperature while Stop is selected and held to initiate/cancel the automatic deodorize.
- 2 LEDs(green/red) of the energy saving blink with 1 beep when it is activated and only 1 LED (red) blinks with 2 beeps when it is deactivated.

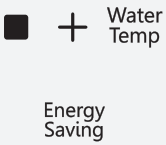

8 Automatic pulsation wash on/off

- Deactivate the seat sensor override.
- Select water pressure +/- simultaneously to enter automatic pulsation wash setting mode.
- Select and hold Rear wash for 3 seconds to initiate/cancel automatic oscillation rear wash. 2 LEDs (green/red) of the energy saving blink with 1 beep when it is activated and only 1 LED (red) blinks with 2 beeps when it is deactivated. Front wash, Turbo wash and Child wash can be set in the same way.
- In the case of Child wash, Child pulsation wash is deactivated first instead of being activated as it is set basically.
  20sec front wash → 20sec front ~~oscillating~~ wash → 20sec front ~~oscillating~~/pulsating wash.

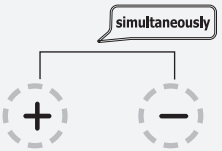

Expert mode

9 Automatic oscillation wash on/off

- Select nozzle position ◀ ▶ simultaneously to enter automatic oscillation wash setting mode.
- Select and hold Rear wash for 3 seconds to initiate/ cancel automatic oscillation rear wash. 2 LEDs (green/red) of the energy saving blink with 1 beep when it is activated and only 1 LED (green) blinks with 2 beeps when it is deactivated. Front wash and Child wash can be set in the same way.
- In the case of Child wash, Child oscillation wash is deactivated first instead of being activated as it is set basically.
  20sec front wash → 20sec front oscillating wash → 20sec front oscillating/pulsating wash

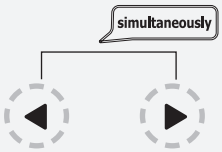

10 Silence mode on/off

- Select water pressure "-"while Stop is selected and held to lower the volume of the beep sound.
- The volume of the beep sound will be lowered after getting out of Expert mode.



11 Water pressure and nozzle position change

- Activate the seat sensor override
- Basically, the water pressure and nozzle position are stored and are maintained from the previous user's settings, but these can be ignored and automatically be changed to the presets as soon as the seat is unoccupied.
- Adjust the nozzle position and water pressure and select and held Rear wash for 3 seconds.
  2 LEDs(green/red) of the energy saving blink with 1 beep when it is activated and only 1 LED (red)blinks with 2 beeps when it is deactivated. Front wash, Turbo wash and Child wash can be set in the same way.
- Adjust the dryer temperature and select and held Dry for 3 seconds.
- 2 LEDs(green/red) of the energy saving blink with 1 beep when it is activated and only 1 LED (red) blinks with 2 beeps when it is deactivated.

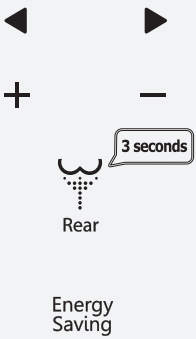

08.Maintenance & Cleaning

※ Dual protection (dryer inner cover and closed nozzle cover) protects the bidet seat from contamination and water damage.

Cleaning the screen filter

- Turn off the water supply and hold the toilet flush lever down to empty the tank completely.
- Unplug the bidet seat, remove from the toilet and disconnect the bidet hose. You may use the bucket to catch any dripping water from the hose and bidet seat.
- Remove the screen filter from the water inlet with a long-nosed pliers.
  Clean the filter with a toothbrush and re-install it correctly.
- Reconnect the bidet hose and place the bidet seat back,
  Plug the power cord back and turn the water supply back on.
  Check for leaks.

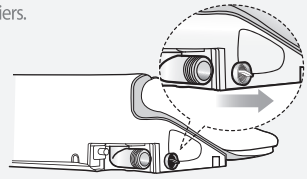

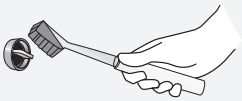

Cleaning bidet seat body

- Do not use thinner, benzene, acidic chemicals, chloride, or hydrochloric acid detergent.
- Do not scrub or use harsh, abrasive products to clean the seat.
- Use a soft, damp cloth and mild cleanser and do not spray water excessively onto the bidet seat.
- If the contamination is serious, use the mild detergent (such as dish soap) only and make sure there is no residue after cleaning.
- Do not use any aerosol(spray) products nearby. This may result in discoloration of the bidet body.
- Unplug first before cleansing, and be aware of not wetting the power plug.
- Be careful of not to drop any chemical detergents of toilet cleanser on the water supply hose or power plug.

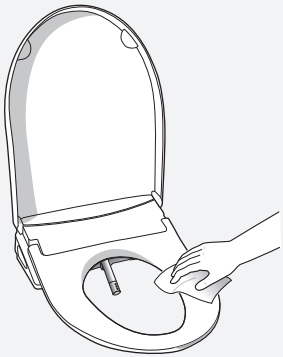

Cleaning the bottom and toilet bowl

- Unplug and shut the water supply off, then flush toilet and hold down dandle to completely empty tank.
- Disconnect water supply hose from the bidet seat. You use a bucket to catch any dripping water from the bidet and hose.
- Press the bidet release lever and gently pull inward to remove the bidet seat.
- Use a soft, damp cloth and mild/neutral cleanser (such as dish soap) to wipe down the bidet body and remove the cleanser completely.
- In case of cleaning the toilet, remove the catch plate first. Make sure there is no cleanser left on the toilet after cleaning. Cleanser residue may damage the bidet body.

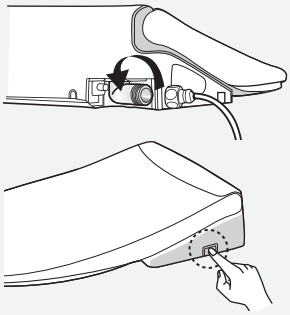

Product storage

- Keep the unit plugged in to prevent freezing if the bidet seat is installed in a cold place.
- When the bidet seat is not used for an extended period of time, unplug. When it is reused after it is stored in a cold place, keep the unit in a warm place for a while before plugging in.

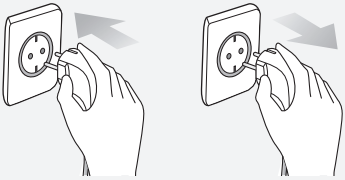

Product storage

- Keep the unit plugged in to prevent freezing if the bidet seat is installed in a cold place.
- When the bidet seat is not used for an extended period of time, unplug. When it is reused after it is stored in a cold place, keep the unit in a warm place for a while before plugging in.

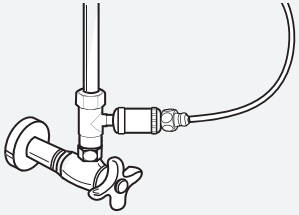

09.Error code

※ In the event of an abnormality, please refer to the error code table below and inform us at the time of receiving repair service, so that the action may be easier.

Remote model / Side arm model

Common display	Left				Right	No.	
Energy saving "Green" and "Red" LED sequentially Blink, and Night light "Red" blinks	Seat temperature "Green" LED blinks					1	Disconnected or not inserted seat temperature sensor
	Seat temperature "RED" LED blinks					2	Short or overheated seat temperature sensor
	Water temperature "Green" LED blinks					3	Disconnected or not inserted intake water temperature sensor
	Water temperature "Green" and Yellow" sequentially blink					4	Short or overheated intake water temperature sensor
	Water temperature "RED" blinks					5	Disconnected or not inserted outlet water temperature sensor
	Water temperature "Yellow" and "Red" sequentially blink					6	Short or overheated outlet water temperature sensor
	○	○	○	○	●	7	Low voltage
	○	○	○	●	○	8	Solenoid valve overcurrent
	○	○	○	●	●	9	Solenoid valve disconnection
	○	○	●	○	○	10	Dry fan motor RPM error
	○	○	●	○	●	11	Deodorizing fan motor overcurrent
	○	●	○	○	○	12	Pump motor overcurrent
	○	●	○	●	○	13	Flow meter disconnection or abnormality
	○	●	○	●	●	14	Overvoltage
	○	●	●	○	●	15	Drying fan motor low/over current

Error code display priority

Error code display is divided into two sections, 1 to 6 and 7 to 14. Error with a smaller number is displayed only. For example, if No. 1, No. 6, No. 8, and No. 14 occur simultaneously, only No. 1 and No. 8 are displayed. If 1 is solved, only 6 and 8 will be displayed, if 8 is solved, 6 and 14 will be displayed.

10. Product Specifications

Item			N-2000 E	N-2000 R	N-2000 U
Power voltage			AC 220V / 60Hz		
Max power consumption			1,430W		
Power cord			1.8M		
Supply water connection			Directly connects to the water pipe		
Supply water pressure			0.068 ~ 0.735 MPa		
Wash	Volume	Rear wash	650±50cc/min (850±50cc/min at 2X mode)		
		Front wash	650±50cc/min (800±50cc/min at 2X mode)		
		Enema wash	760±50cc/min		
	Pressure control		Rear/Front wash (10 levels incl. 2X mode) Turbo(enema) 5 levels		
	Temperature control		4 levels (Off, low, middle, high)		
	Max heater power consumption		1,400W		
	Safety devices		Thermal sensor, Thermal fuse, Thermal switch		
Heated seat	Temperature control		4 levels (Off, low, middle, high)		
	Max heater power consumption		38W		
	Safety devices		Thermal sensor, Thermal fuse		
Dry	Temperature control		5 levels		
	Heater capacity		400W		
	Safety device		Thermal fuse		
Deodorizer			Catalyst Carbon deodorization filter (replaceable)		
Incoming water temperature tolerance range			3 ~ 35°C (12 ~ 35°C recommended) 3 ~ 40°C (10 ~ 35°C recommended)		
Usage room temperature tolerance range			3 ~ 40°C (10 ~ 35°C recommended) 3 ~ 40°C (10 ~ 35°C recommended)		
Product dimensions			380mmX528mmX102mm	380mmX500mmX102mm	380mmX521mmX99mm
Remote dimensions			55mm X 177mm X 18mm		
Product weight			4~4.5kg(6.5~7kg)		
Remote weight			75g		

11.Comparison Chart

	Feature	N-2000 E	N-2000 R	N-2000 U
Wash - Dry	Rear wash	●	●	●
	Front wash	●	●	●
	Turbo (Enema)	●	●	●
	Child wash	●	●	●
	Pulsation	●	●	●
	Oscillation	●	●	●
	Instant heating	●	●	●
	Aerated wash	●	●	●
	Built in pump	●	●	●
	Drying	●	●	●
Convenient feature	Deodorizing	●	●	●
	Heated seat	●	●	●
	User preset	●	●	●
	Soft closing	●	●	●
	Quick removal	●	●	●
	Night light	●	●	●
	Nozzle cleansing(2 modes)	●	●	●
	Energy saving(2 modes)	●	●	●
Safety feature	Low burn protection	●	●	●

12.Dimension

[National N-2000 ELONGATED TYPE]

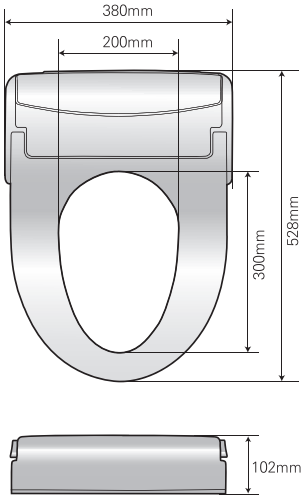

[National N-2000 ROUND TYPE]

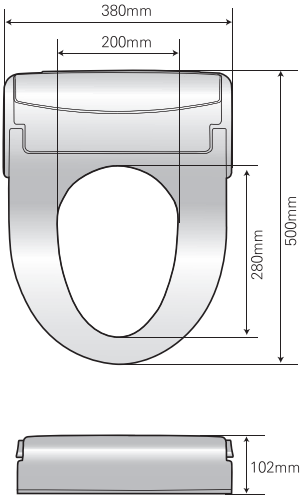

[National N-2000 U COLLECTION TYPE]

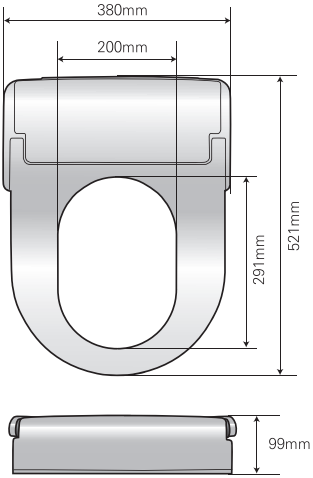

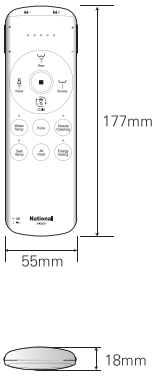

13. Warranty Information

2 YEAR WARRANTY PARTS & LABOUR

1. We hereby warrant that the Product will be free from manufacturing defects which affect the ability of the Product to operate for its intended use.
2. In case of failure immediately cease using the Product. Go to nationalbidet.com and view the troubleshooting guide, if this does not solve the problem contact customer support.
3. Warranty is for product only and does not include deinstallation/installation or shipping.
4. For comprehensive warranty information go to nationalbidet.com

Please complete form for your own records

Product Name			
Model Name			
Date Purchased			
SER. No.			
Customer's Address		Name	
		Tel.No	
Distributor's Address		Name	
		Tel.No.	

Our goods come with guarantees that cannot be excluded under the Australian Consumer Law. You are entitled to a replacement or refund for a major failure and for compensation for any other reasonably foreseeable loss or damage. You are also entitled to have the goods repaired or replaced if the goods fail to be of acceptable quality and the failure does not amount to a major failure.

Please choose carefully we do not normally give refunds if you simply change your mind or you have measured incorrectly or for health reasons if the bidet has been used.

We will refund, exchange or credit if the goods are faulty and cannot be repaired.

Please retain your invoice for the period of your warranty.
Any returns may incur up to 20% restocking fee and/or shipping costs.

See Consumer Laws in relation to change of mind
(AUST) www.consumerlaw.gov.au (NZ) www.consumerprotection.govt.nz

National
AUSTRALIA: 1201/56 Scarborough St, Southport, QLD 4215
New Zealand: Unit 5/31 Princes St, Onehunga 1061
AUS PH: 02 9137 6103 NZ PH: 09 281 5056
nationalbidet.com

For comprehensive warranty information please visit nationalbidet.com