InteliWash

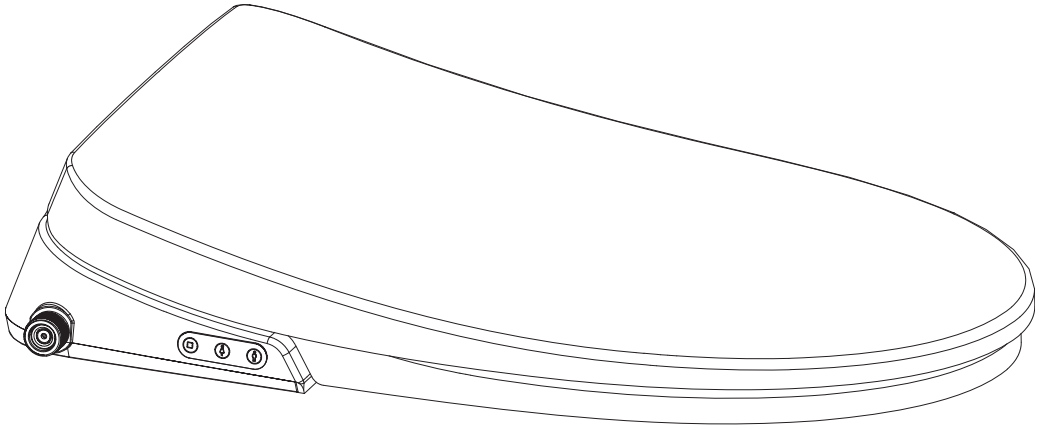

Installation and Operating Instructions for Side Inlet Retrofit

Contents Page

1. Explanation of Symbols, Safe Precautions and Guidelines

2. Contents of Box

3. Technical Specifications

4. Bidet Dimensions

5. Pan Dimensions Required for the Bidet

6. Installation Instructions for Inteliwash Retro

11. Remote Control Installation

12. Inteliwash Overview

13. Remote Control

14. Operation Instructions

16. Care and Cleaning

17. Replacing the Batteries

18. Troubleshooting

Explanation of Symbols

DANGER Refers to potentially dangerous situation that may cause serious injury or death.

NOTICE Refers to potentially dangerous situation that may cause injury or property lose.

FORBID Refers to a forbidden action.

MUST BE ABIDED Refers to a situation in which you much abide by the rules.

SAFETY PRECAUTIONS
WARNING: THIS TOILET DOUCHE MUST BE INSTALLED WITH APPROPRIATE BACKFLOW PROTECTION CONFORMING TO THE NATIONAL CONSTRUCTION CODE - VOLUME 3

INSTALLATION MUST BE IN ACCORDANCE WITH AS/NZS 3500,2

THIS TOILET DOUCHE SEAT HAS AN AIR GAP IN THE WATER TANK THAT IS COMPLIANT TO AS2845. 2 AND IS SUPPLIED WITH DUAL CHECK VALVE - WATER SUPPLY BACKFLOW PREVENTION.

NOTE: LOCAL AUTHORITIES MAY HAVE VARYING REQUIREMENTS. CHECK TO CONFIRM IF RPZ VALVE IS REQUIRED.

Intelicorp will not be liable for any loss arising from failure to comply with the following:

1. This product is an "I" type electrical appliance and must be safely connected to the grounding system.
2. This product is an electrical appliance and should not be installed in a location where it can come in contact with splashing water e.g. close to shower or high temperature location.
3. If the power supply code becomes damaged, do not use until it has been repaired by a qualified electrician.
4. The appliance should be permanently connected to the water supply.
5. The Portable Residual Current Device (PRCD) is supplied as part of the power supply cord and must be reliably fixed.



To avoid the risk of electric shock, short circuit or fire, never perform the following:



1. Do not insert or remove power plug with wet hands.
2. The power supply must comply with local regulations.
3. Do not turn the product upside down.
4. Do not distort or bend the flexible water inlet hose.

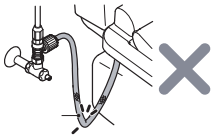

Contents of Box

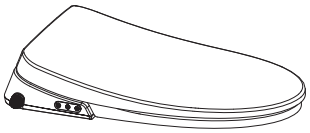

Bidet Seat

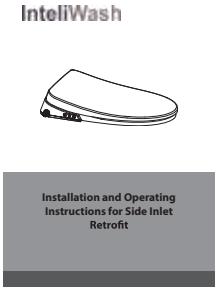

Manual



Remote



Filter

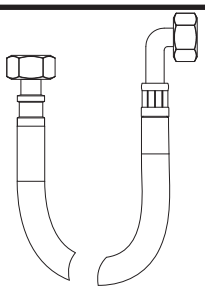

1/2" Flex Hose

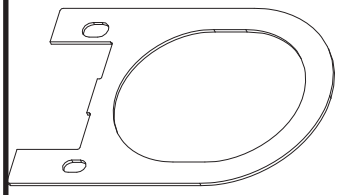

Installation Template



Dual Check Valve

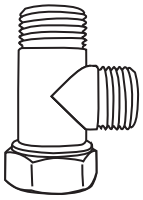

T Shaped Connector



Top Fixing Bolts

Technical Specification

Model		Inteliwash - Retro	Inteliwash - Suite
Wash	Rear Wash	●	
	Female Wash	●	
	Oscillating Spray	●	
	Pulsating Spray	●	
	Oscillating and Pulsating Spray	●	
	Adjustable Water Temperature	5 Steps (Default 3rd step)	
	Adjustable Flow Rate	5 Steps (Default 3rd step)	
	Adjustable Spray Position	5 Steps (Default 3rd step)	
Hygiene	Nozzle Self Cleaning	●	
	Nozzle Manually Cleaning	●	
	Night Light	●	
	Soft Closing Seat and Cover	●	
	Quick Release Seat and Cover	●	
	Body Keys	●	
	Remote Control	●	
	Descaling	●	
	Water Supply Connector	G 1/2	G 3/8
	Water Supply Direction	Right Side	Bottom Side
	Water Supply Pressure	0.07~ 0.75MPa (0.7~7.5Bar)	
	Water Supply Temperature	4~35°C	
	Rated Voltage	AC220-240V, 50/60HZ	
	Power	950W	
	Length of Power Cord	about 1.8	
	Ambient Temperate	4~40°C	
	Protection Degree	IPX4	
Wash Device	Flow Rate	350~650mL/min	
	Water Temperate	31~39°C	
	Wash Cycle Time	3 Minutes	
	Heating Mode	Tank	
	Maximum Heater Power	1200W	
	Safety Device	Thermal Cutoff Fuses\Liquid Level Switch\Thermostat	
	Backflow Prevention	Air Gap	
Remote Control	Frequency Range	2460MHz	
	Maximum RF Output Power	-10dBm	
	Type of Batteries	3V CR2032 Lithium Manganese Dioxide button cell	
	Number of Batteries	2x AAA Batteries	
	Other Safety Device	Residual Current Devices	
	Net Weight	6Kg	
	Dimension	521x375x106 mm	

Intelicorp pursues a policy of continual improvement in design and performance of its products. The right is therefore reserved to vary specifications without notice.
Always refer to the latest instructions for this product.
The images in these instructions are for reference only. Please always refer to the actual product.

Bidet Dimensions - Inteliwash Retro Fit

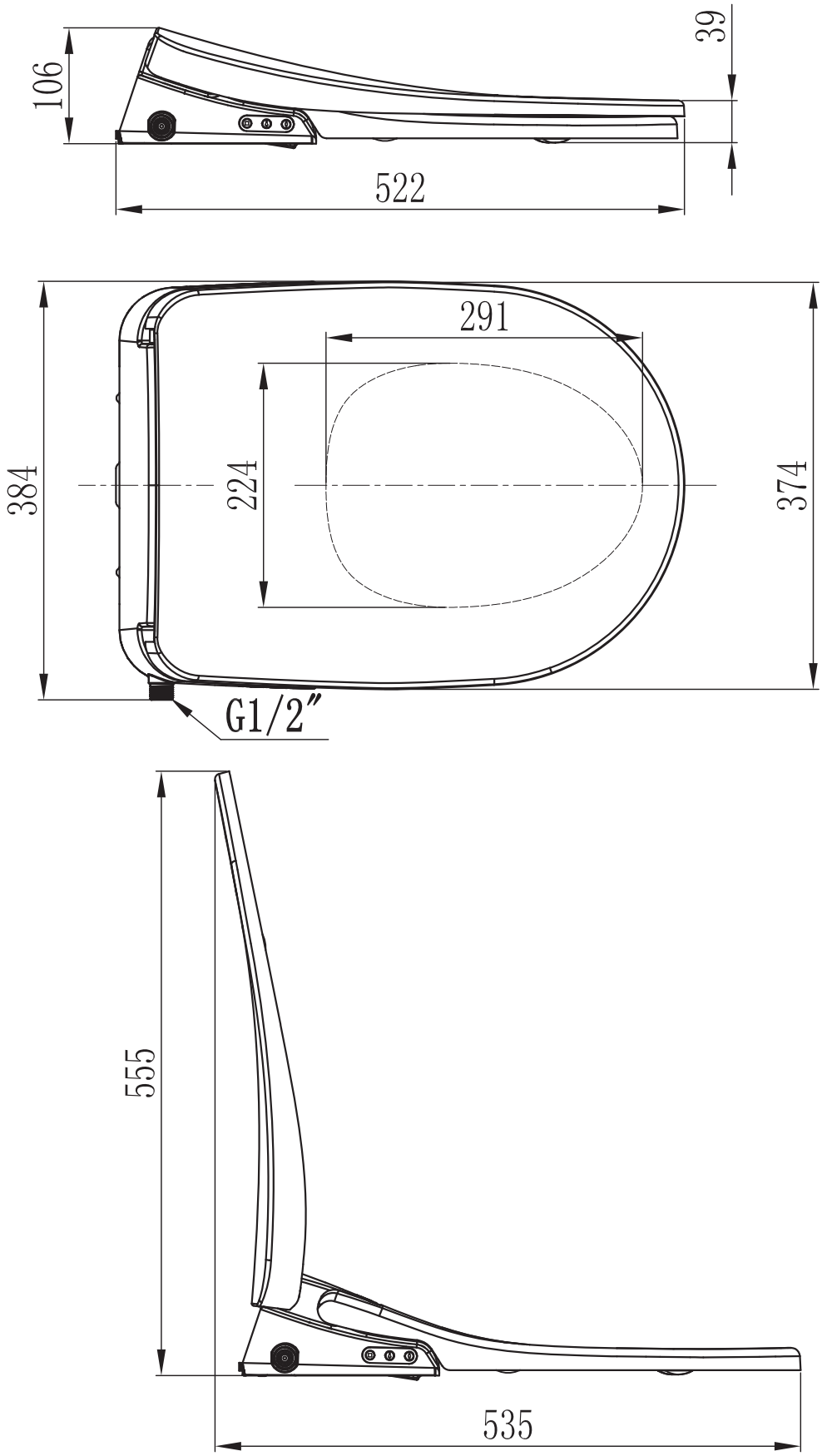

Bidet Dimensions - Inteliwash Retro - Required Pan Specifications

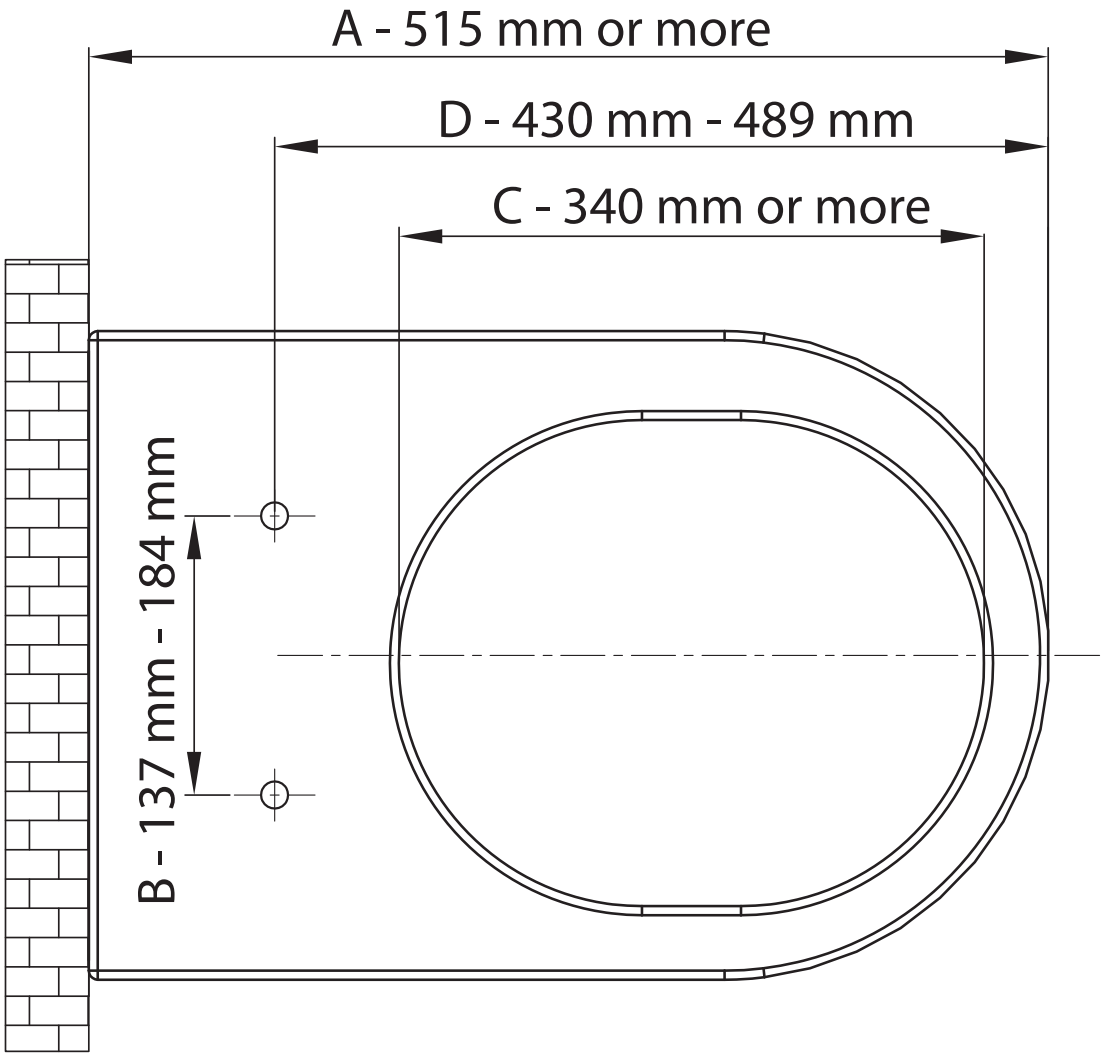

Installation Instructions for Inteliwash Retro

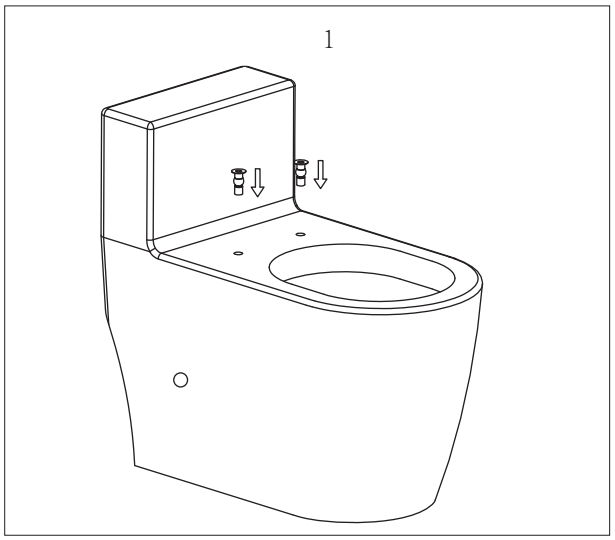

Step 1:
Make sure to remove any previously installed seat.
Insert rubber grommets into bolt holes.

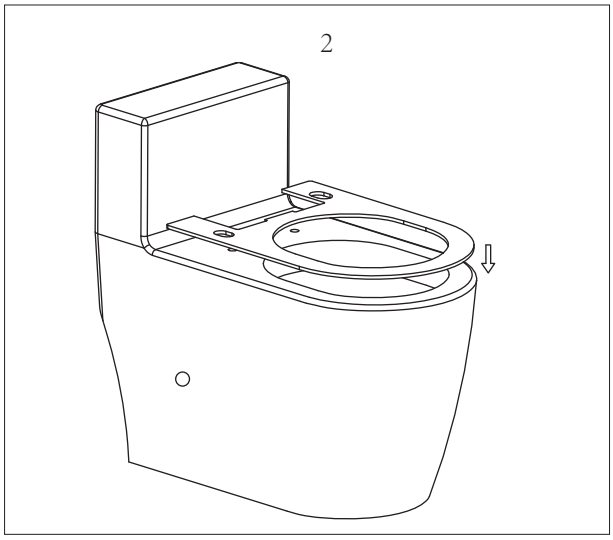

Step 2:
Place Installation Template on the top surface of pan.
Adjust the template until desired fit has been achieved.

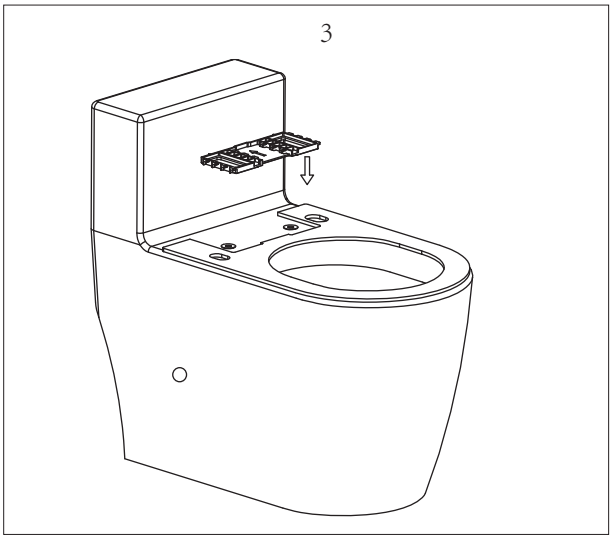

Step 3:
Line the Base Plate with the gap in the Installation Template, making sure the arrow on the Base Plate is pointed towards the cistern/wall behind toilet.

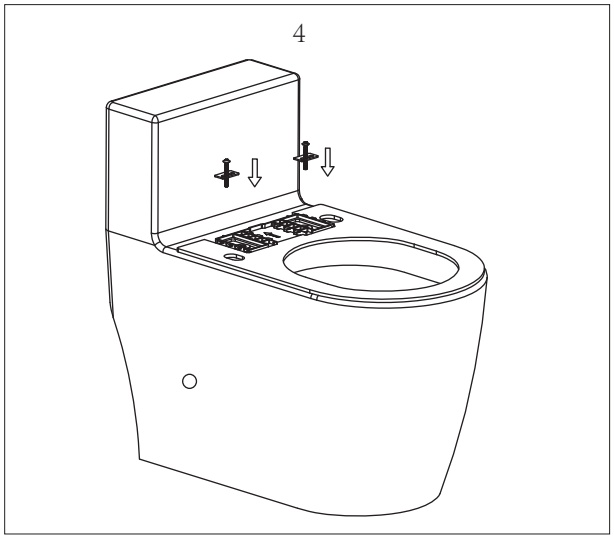

Step 4:
Insert Bolts into sliders then screw bolts into rubber grommets that are installed into the pan (as seen in Step 1).

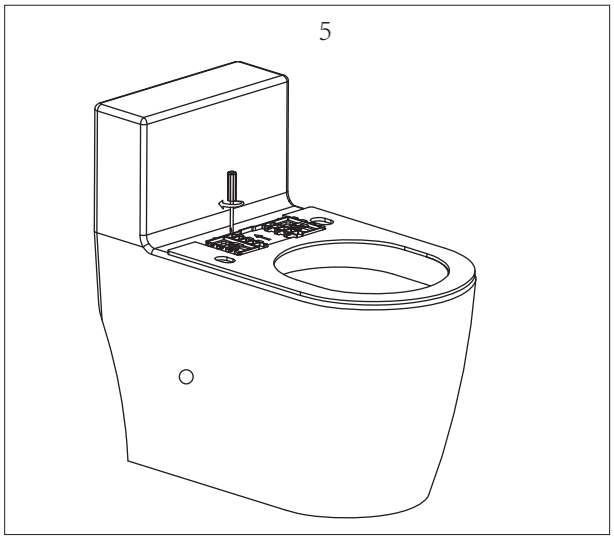

Step 5:
Tighten bolts until the base plate is fastened securely to the toilet pan.

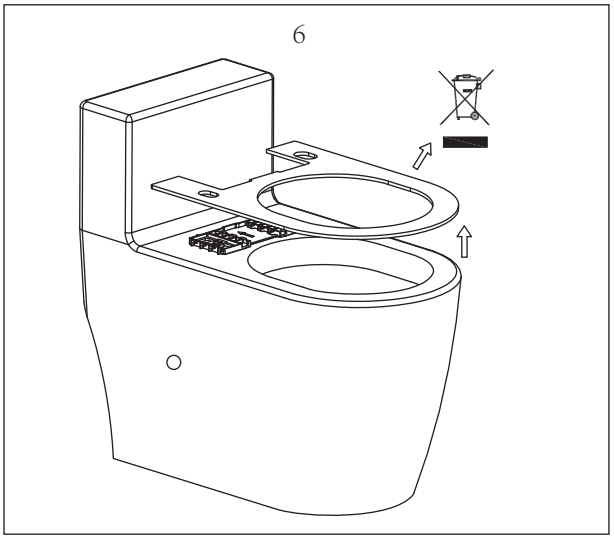

Step 6:
Remove Installation Template, make sure to keep for future installations or realignment.

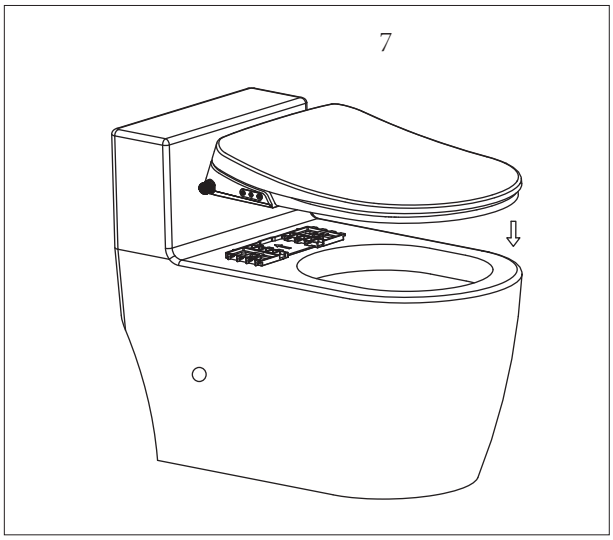

Step 7:
Place Inteliwash Retro infront of the Base Plate on the top surface of toilet pan.

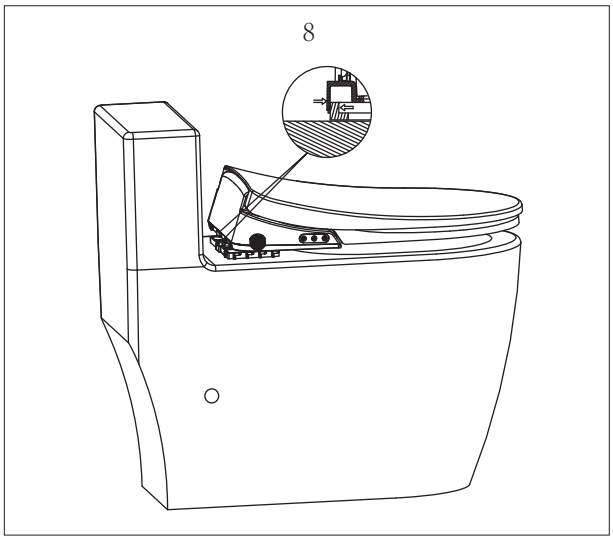

Step 8:
Align Inteliwash Retro with Base Plate.

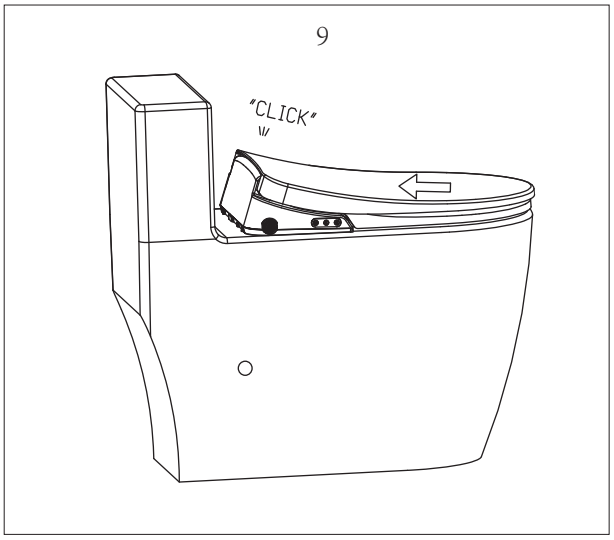

Step 9:
Slide Inteliwash Retro onto the Base Plate. Ensure you hear a click as this indicates the Inteliwash Retro is secured.

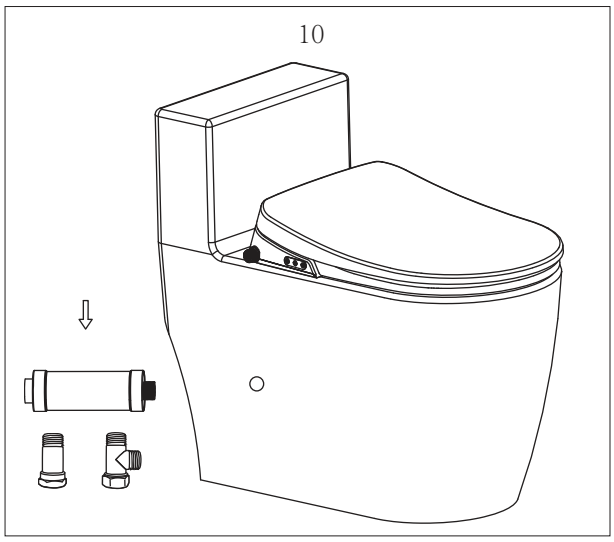

Step 10:
Make sure you have the following parts:
1. Dual Check Valve.
2. T - shaped connector.
3. Filter

Turn off water tap before disconnecting the hose connecting the cistern and Water Tap.

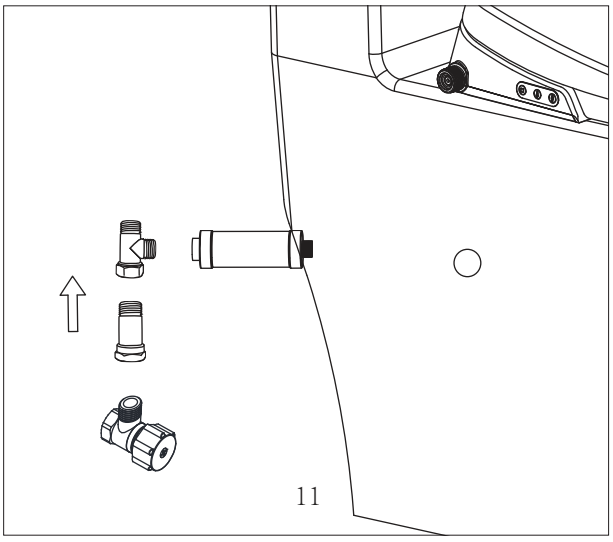

Step 11:
Screw the Dual Check Valve on to the tap. Screw the T -shaped connector on to the Dual Check Valve, then screw the Filter on the perpendicular out let of the T - shaped connector.

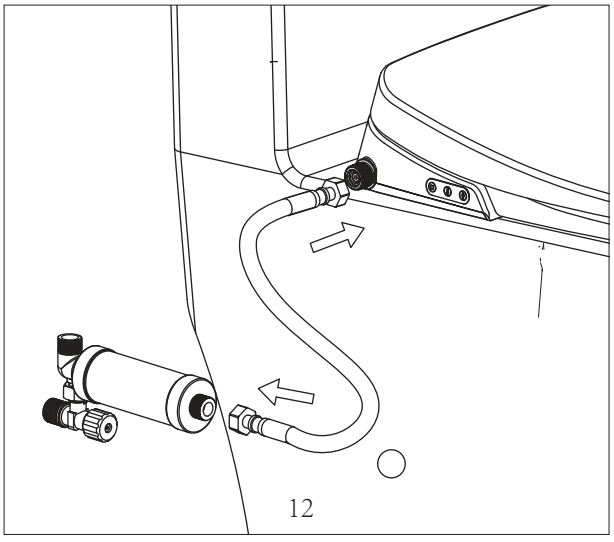

Step 12:
Connect the 1/2" hose to the end of the filter then connect the other end of the hose to the Inteliwash Bidet. Connect the 1/2 " hose that is connected to the cistern, to the opposite side to the T Shaped Connector.

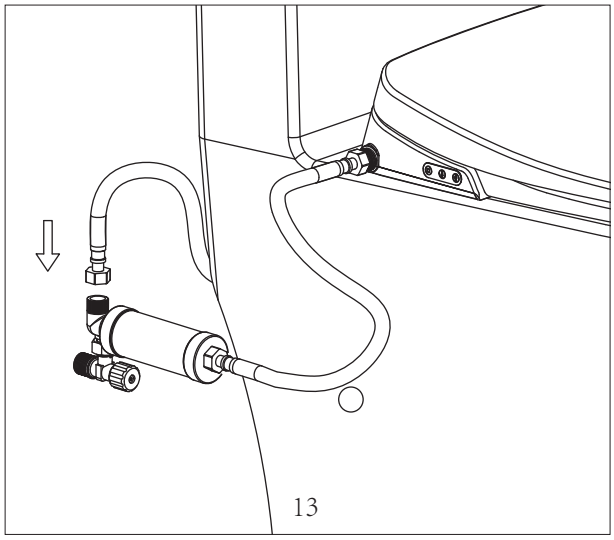

Step 13:
Connect the 1/2 " hose that is connected to the cistern, to the opposite side to the T - Shaped.

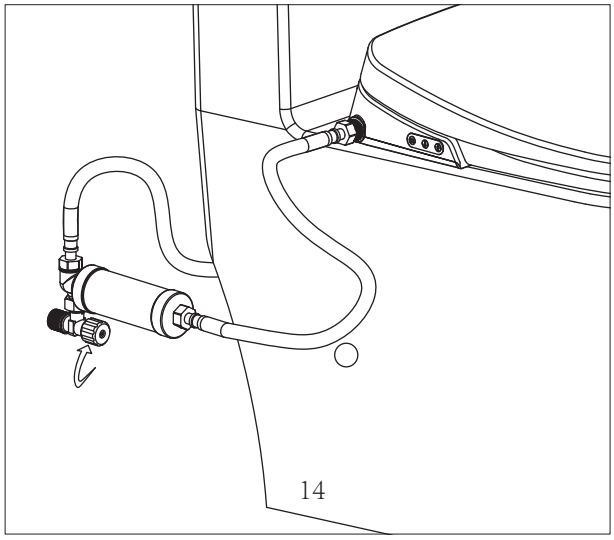

Step 14:
Turn Tap on and check for any leaks.

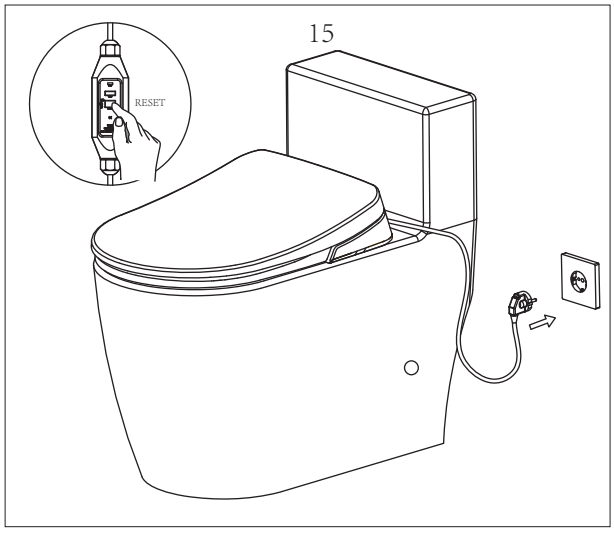

Step 15:
Once you have checked and made sure there are no leaks, plug in the Inteliwash Retro to the wall socket. Please make sure to secure the surge protector.

Remote Control Installation

Recommended Installation Area

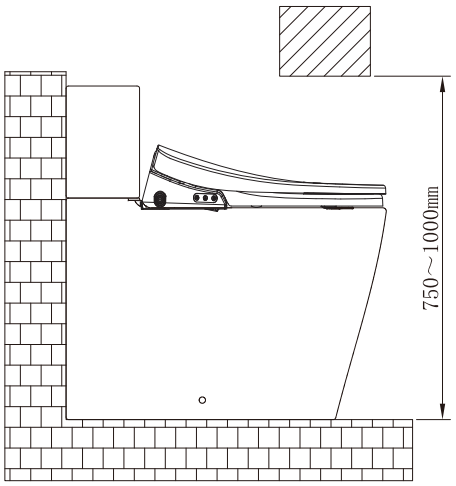

1

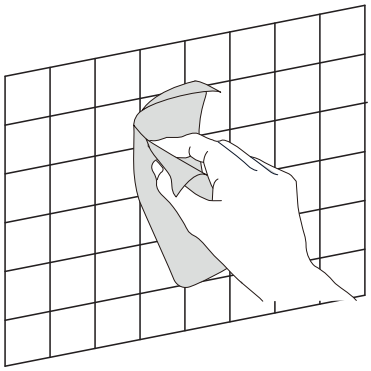

2

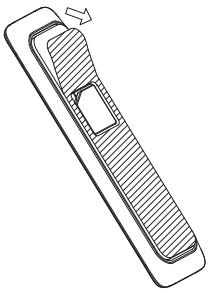

3

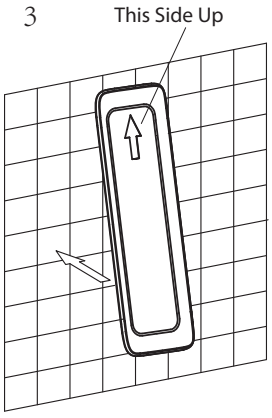

4



Inteliwash Overview

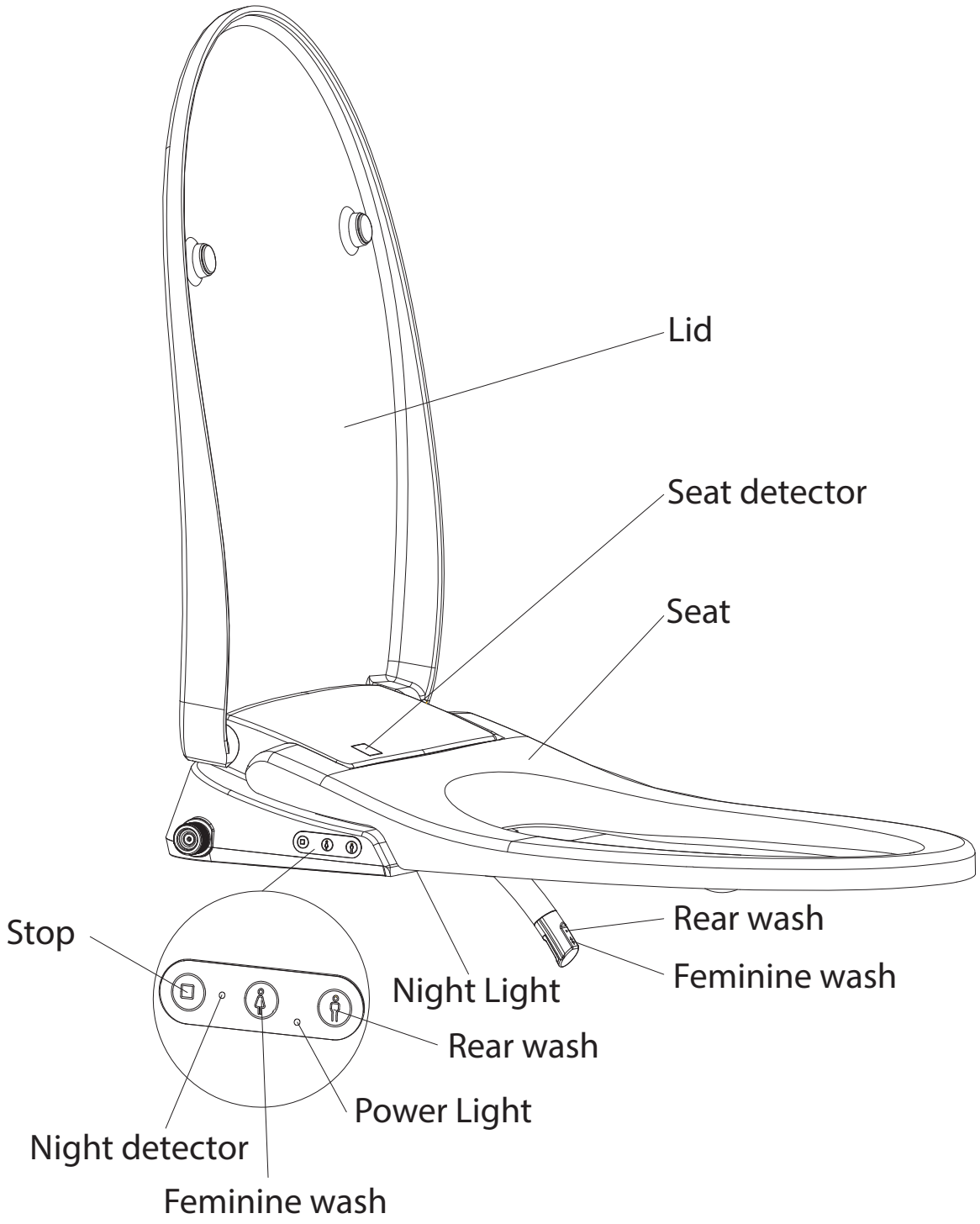

NOTICE

Intelicorp pursues a policy of continual improvement in design and performance of its products. The right is therefore reserved to vary specifications without notice.
Always refer to the latest instructions for this product.
The images in these instructions are for reference only. Please always refer to the actual product.

Remote Control

Light Indicators - displays what level the functions are being adjusted to

Increase and Decrease Button - Used with function buttons to make adjustments.

Temperature Control Button - Used with Increase and Decrease Button to change water temperature.

Flow Strength Button - Used with Increase and Decrease Button to change strength of the water during washes.

Front Wash Button - Used to activate front wash function.

Move Button - Used with Increase and Decrease Button to change wash nozzle position.

Rear Wash Button - Used to activate rear wash function.

Stop Button - Used to stop any functions currently in operation. Also used to put bidet in Stand-By mode.

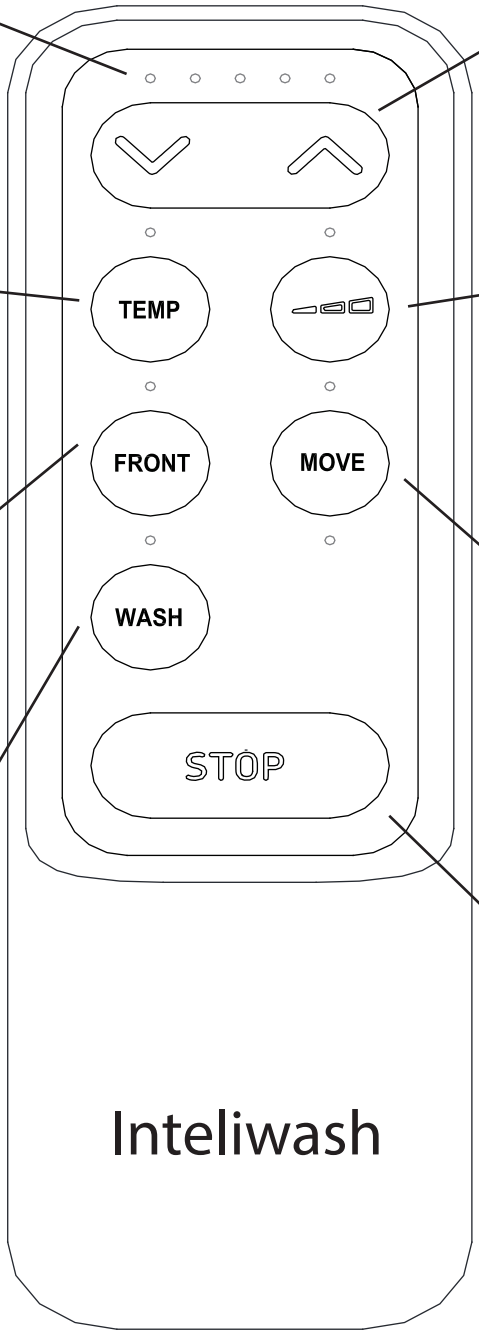

Operation Instructions

Rear Wash / Front Wash

While seated, press Rear Wash or Female Wash button on the remote control or at the side of the bidet, the bidet will then start to wash and stop after 3 minutes . You can stop washing at any time by pressing STOP on the remote control or the STOP Button on the side of the bidet.

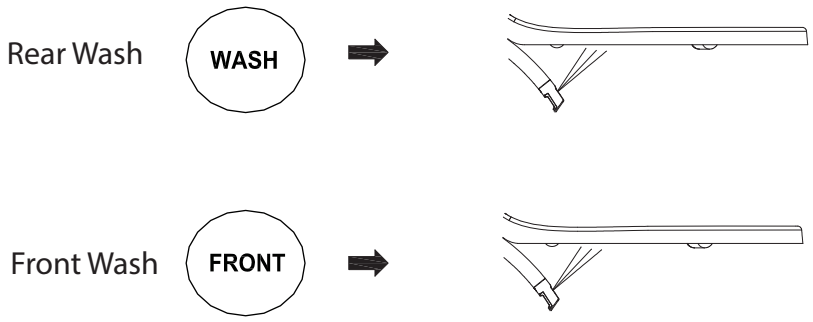

Note:
While using Rear Wash or Female Wash, it will wash at the fixed position for 10 seconds, and then move backwards and forwards for 18 seconds, then return to the fixed position until complete.

Adjusting the Flow Rate

During Rear Wash or Female Wash , press the Flow Rate ( ) button then Increase ( ) or Decrease ( ) on the remote control to adjust the flow rate
of water. The lights on the remote control will change to indicate the setting.

Stop Operation

During Rear Wash or Female Wash, press the STOP (STOP) button on the remote control or any button on the bidet and it will stop washing or drying.

Massage Operation (spray jet will move back and forth)

During Rear Wash or Female Wash, keep pressing Stop Button on the remote control then press Female Wash (FRONT) to alternate between the different massage modes: Oscillating, Pulsating, Oscillating+Pulsating.

Temperature Adjustment

During Rear Wash or Female Wash , press the Temp Rate (TEMP) button then Increase (^) or Decrease (v) on the remote control to adjust the temperature rate of water. The lights on the remote control will change to indicate the setting.

Setting the Night Light

Press and hold the Temperature Increase (^) on the remote control, and then press Position Decrease (v) to alternate between the different modes:
Off: When one (1) indicator light is on.
Always On: When two (2) indicator lights are on.
Smart: When three (3) indicator lights are on.
Note: In Smart mode, the night light will be ON in a dark environment and OFF in a bright environment.
Night Light is set to Always On mode by default.

Turning the Bidet on or off

Hold down the Stop Button on the side of the bidet for 6 seconds to put the bidet into stand-by mode. Hold down the Stop Button on the side of the bidet for 6 seconds while in stand-by mode to turn the bidet back on.

Remote Control Pairing Setting

1. Keep pressing the Stop Button (STOP) and Temperature Button (TEMP) on the remote control at the same time for a few seconds, then the five indicators at the top will be on in turn and then be off.

2. When the Temperature indicator blinks, release above two buttons.

3. Press the Increase (^) or Decrease (v) buttons to change different product ID code with corresponding indicator lights up. There are 32 ID codes in total. It is on the first code by default (all of the five indicators at the top are off).

4. Press the Stop Button (STOP) at the side of bidet.

5. Press the Stop Button (STOP) on the remote control.

Care and Cleaning

Maintenance Interval	Action
Weekly	Clean all surfaces and corners. Clean the spray nozzle if required
Every 6 months	Replace the filter if required

Cleaning Agents and Tools



Always use a soft lint free cloth

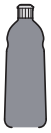

Use only warm water or mild dish washing detergents

It is important that no abrasive cleaners are used, as these will remove the anti microbial coating and the product may discolor. Domestic Cleaning products and chemicals can make the plastics brittle and they may crack.

At regular intervals the tightness of the hinge bolts must be checked as continual use may cause loosening over time.

Self-Cleaning tank

If the Electronic Bidet has not been used for more than 72 hours and when the user is seated, self-cleaning will activate for 3 minutes. All buttons are inactive during self-cleaning process and will return to normal once operation is complete.

Replacing the Filter

The manufacturer recommends that you change the filters on average every 6 months to protect the internal heating and water temperature regulating controls of your electronic bidet product and to stop build up and clogging of the micro galleries that could cause leaking or malfunction.
If a filter is over 12 months old, the filter plastic may deteriorate and leak.

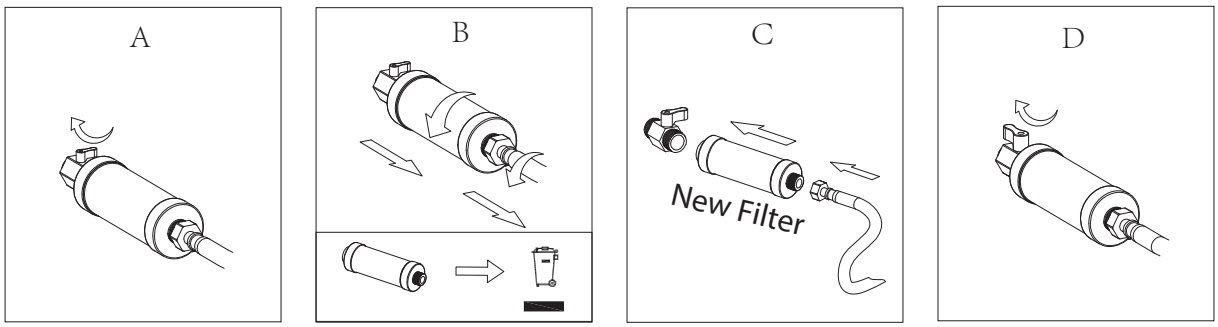

Replacing the Batteries

The remote control requires 2 batteries (AAA).
When the level light flashes continuously , please replace the batteries in time.

1. Different types of batteries or new and used batteries are not to be mixed.
2. Batteries are to be inserted with the correct polarity.
3. The exhausted batteries are to be removed from the appliance and safely disposed of.
4. If the appliance is to be stored unused for a long period, the batteries should be removed.
5. The supply terminals are not to be short-circuited.
6. Do not use rechargeable or lithium batteries.
7. Only use super alkaline (Energizer or Duracell are recommended)

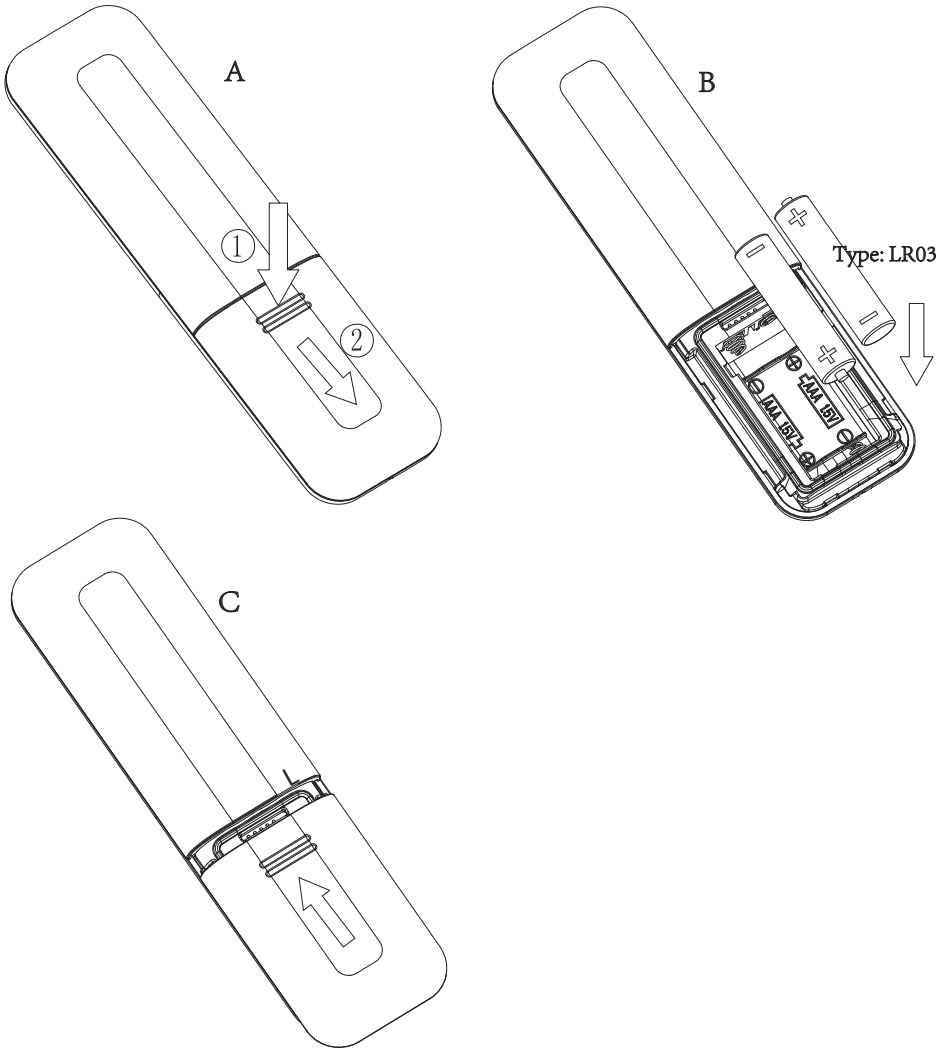

Troubleshooting

Problem	Potential cause	Suggested action
Not washing	The power supply may not be ON.	Turn ON the power.
	The water supply may not be opened.	Open the water inlet valve to ensure there is a water supply.
	The filter (if used) may be blocked.	Replace with a new filter. Service life is approx. 6 months.
	User may not be sitting on seat.	Sit on the seat and adjust sitting position (bidet will not operate if it cannot detect a user).
	Cover may be closed.	Open the cover and sit on the seat.
	May not have been used for more than 72 hours.	If not used for more than 72 hours: When the user sits down it will execute the self-cleaning function for approx. 3 minutes. All buttons are inactive during this function and will return to normal once complete.
The nozzle goes back suddenly	The washing cycle is 3 minutes at constant Temperature mode and 1 minute at gradual cooling.	This is normal; press the "Wash" button to restart washing function.
	There may be a problem with the water supply.	Check if there is a water outage in the area.
	The seat sensor may be detecting that the user is no longer sitting.	Adjust sitting position.
	The cover may be attempting to close.	Do not put down the cover while it is washing.
Low water flow rate	The water flow rate may be set to Low.	Increase the flow rate as per "Adjusting Water Flow Rate" chapter of instructions.
	The water supply pressure may be too low.	Please check and ensure the water supply pressure is ≧0.5 bar (dynamic pressure).
	The filter (if one is used) may be blocked.	Replace with a new filter. Service life is approx. 6 months.
	The nozzle may be blocked.	Replace with a new nozzle.
Low water temperature	The water temperature may be set to Low.	Increase the water temperature as per "Adjusting Temperature" chapter of instructions.
	The temperature of water supply may be too low.	Increase the water temperature as per "Adjusting Temperature" chapter of instructions or decrease the Flow Rate as per "Adjusting Water Flow Rate" chapter of instructions.
	The water thermostat is OFF.	Reset the the thermostat as per "Resetting Thermostat" chapter of instructions.
The nozzle extends slowly	When performing Wash function, the nozzle will self-clean before extending and may take some time.	This is normal.
Water flows out of nozzle but nozzle does not extend automatically	When performing Wash function, the nozzle will self-clean before coming out and may take some time.	This is normal.
	May not have been used for more than 72 hours.	This is normal. If not used for more than 72 hours and the user sits down, it will execute the self-cleaning function for approx. 3 minutes.
The Dryer will not work	The power supply may be OFF.	Turn ON the power.
	User may not be detected.	Sit on the seat and adjust sitting position.
	The cover may be closed.	Open the cover and sit on the seat.
	May not have been used for more than 72 hours.	If not used for more than 72 hours: When the user sits down it will execute the self-cleaning function for approx. 3 minutes. All buttons are inactive during this function and will return to normal once complete.
Low air temperature	The air temperature may be set to a low setting.	Increase the air temperature as per "Adjusting Temperature" chapter of instructions.
	The air heater is not heating.	Contact local distributor.
Night Light is always OFF	Bidet seat is located in a bright environment.	When the Night Light is set to Smart Mode, the Night Light feature will not work when located in a bright environment.
	The Night Light function may be OFF.	Open the Night Light function and adjust the Night Light mode as per "Setting Night Light" chapter of instructions.
Night light is always ON	Bidet seat is located in a dark environment.	When the Night Light is set to Smart Mode, the Night Light feature will not work when located in a dark environment.
	An object may be covering the sensor.	Remove any obstructions around the sensor.
	The Night Light may be set at ‘Always ON’ mode	Adjust the Night Light mode as per ‘Setting Night Light’ chapter of instructions.
The nozzle goes back automatically during manual cleaning	The nozzle goes back after washing 5 minutes.	This is normal.
	Press the "STOP" button.	Manual Cleaning will stop if the ‘STOP’ button is pressed on the remote control.
Remote control not working	No batteries in the remote control.	Install the correct batteries in the remote control.
	Battery power is too low.	When the battery power is low the LED of grade will flash. Replace the batteries.
	The Bidet code and remote control codes are not the same.	Set the remote control code to the correct one. See ‘Remote Control Pairing Setting’ chapter in instructions.
There are BEEP sounds when the bidet is working	There is a short BEEP when you are sitting down, and a long BEEP when you leave. There is also a short BEEP when the bidet receives a command.	This is normal. You can turn OFF the sound. Refer to ‘Sound Setting’ chapter in instructions.
The bidet is not operating normally		Shut OFF the power and turn ON after one minute. If the bidet still does not work, contact local distributor.
The light on the body flash 6 times and constantly beeps	The water supply temperature may be too high.	Shut OFF the power and water supply, stop using the product and contact the local distributor.
The light on the body keeps flashing		Check if the electrical power and water supply are working as normal, switch OFF the power and restart the product. If the bidet still will not work, please contact the local distributor.

InteliWash

Intelligent Hygiene System

Back Flow Prevention Inbuilt: AB Type Air Gap

Compliant to AS2845.2 water supply backflow prevention.

IPX4 WMTS 051 20094 JAS-ANZ ABCB E5780

WARNING: THIS TOILET DOUCHE SEAT MUST BE INSTALLED WITH APPROPRIATE BACKFLOW PROTECTION CONFORMING TO THE NATIONAL CONSTRUCTION CODE - VOLUME THREE.

AUSTRALIA: 1201/56 Scarborough St, Southport, QLD 4215
New Zealand: Unit 5/31 Princes St, Onehunga 1061
AUS PH: 02 9137 6103 NZ PH: 09 281 5056

Model: InteliWash

220 V - 240 V,
50/60 Hz 950 W
0.07 MPa-0.75 MPa

Installation instructions Scan Here

Made in China for Intelicorp Pty. Ltd.