INSTALLATION GUIDE

InteliWash

Smart bidet seat · Step-by-step installation

For use by licensed plumbers. Read all steps before starting.



Before you begin

01
Licensed plumber
Install to AS/NZS 3500 and WMTS 051:2016, with backflow protection to NCC Volume Three.

02
Water off
Turn off the water at the wall tap before you start.

03
Power point
A 240V earthed power point is required within 1.5 m, on the right-hand side of the toilet.

04
Use the new hose
Always use the new ½" flex hose supplied, not the old one.

Check the tap position. Looking at the toilet, the water connection is on the left and the power lead on the right. This cannot be changed. If your tap is on the right, you'll need 1 m of ¼" white pipe and 2 x John Guest adaptors. If it's in the cistern, you'll need a ½" internal fitting kit, 1 x John Guest adaptor and 1 m of white pipe.

What's in the box

Tools needed: Phillips screwdriver and standard plumbing tools

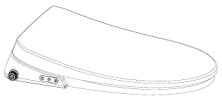
InteliWash bidet seat


Remote control


User manual

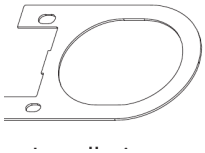
Installation template


Top fixing bolts & grommets


Dual check valve

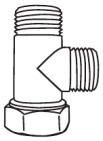
T-shaped connector


Filter

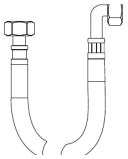
½" flex hose


Remote holder

Base plate

Steps 1 – 6 · Secure the base plate to the toilet pan

1

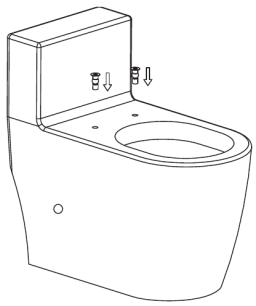

BASE PLATE

Fit the rubber grommets

Remove the existing toilet seat, then push the rubber grommets into the seat bolt holes in the pan.

2

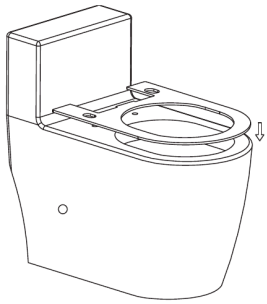

BASE PLATE

Place the template

Lay the installation template on top of the pan and line it up with the bowl.

3

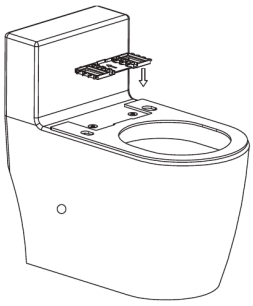

BASE PLATE

Position the base plate

Line the base plate up with the gap in the template, with the arrow on the plate pointing toward the cistern or wall.

4

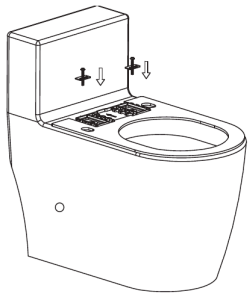

BASE PLATE

Insert the bolts

Put the bolts through the sliders, then screw them into the rubber grommets in the pan.

5

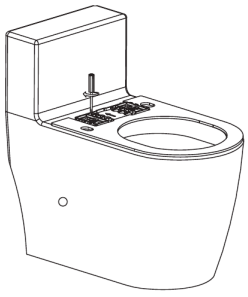

BASE PLATE

Tighten the bolts

Tighten the bolts until the base plate is fastened securely to the pan.

6

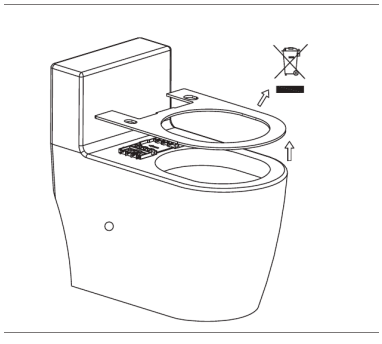

BASE PLATE

Remove the template

Slide the template out. Keep it for future installs or realignment.

Fit the bidet & water

Steps 7 – 12 · Slide the bidet on and connect the water supply

7

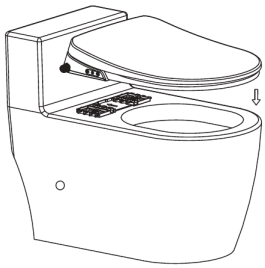

FIT THE BIDET

Place the bidet

Sit the InteliWash on the pan just in front of the base plate.

8

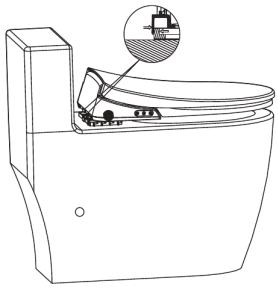

FIT THE BIDET

Line it up

Align the back of the InteliWash with the base plate, as shown in the detail.

9

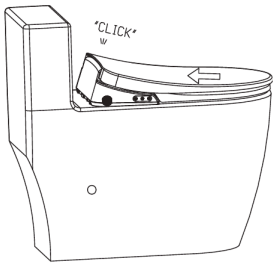

FIT THE BIDET

Slide on until it clicks

Slide the InteliWash back onto the base plate. A click means it is secured.

10

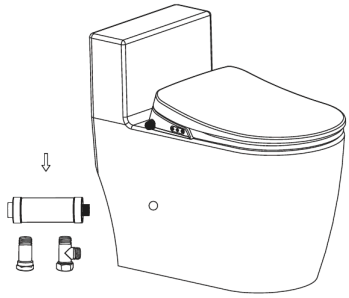

WATER CONNECTION

Gather the fittings

You need the dual check valve, T-shaped connector and filter. With the water off, disconnect the hose between the tap and cistern.

11

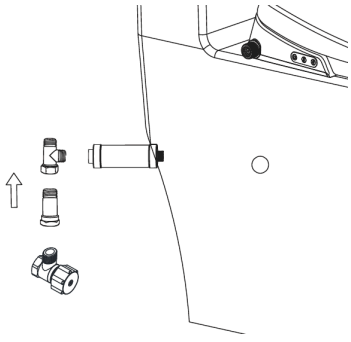

WATER CONNECTION

Fit valve, T-piece & filter

Screw the dual check valve onto the tap, the T-shaped connector onto the valve, and the filter onto the side outlet of the T-piece.

12

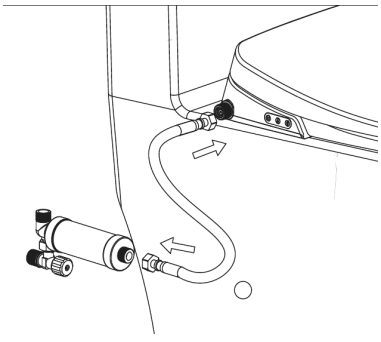

WATER CONNECTION

Connect the bidet hose

Connect the new ½" flex hose from the filter to the water inlet on the InteliWash.

Water, power & remote

Steps 13 – 16 · Finish the water connection, power up and mount the remote

13

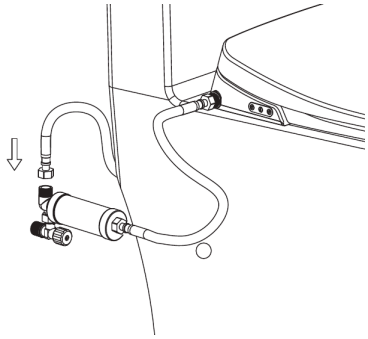

WATER CONNECTION

Reconnect the cistern

Connect the cistern hose to the other outlet of the T-shaped connector.

14

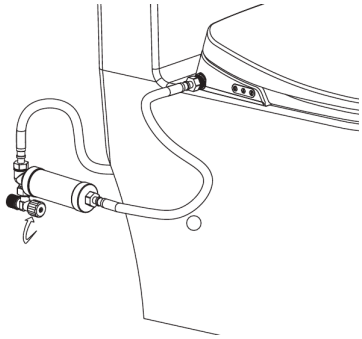

WATER CONNECTION

Water on & leak check

Turn the tap on and check every connection for leaks.

15

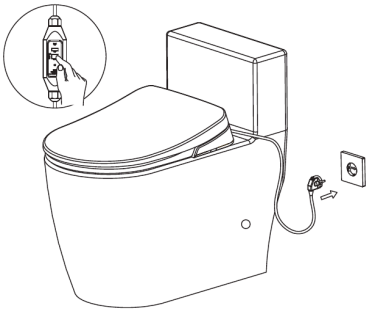

POWER

Plug in

Once there are no leaks, plug the InteliWash into the wall socket and make sure the in-line safety switch on the lead is secure.

16

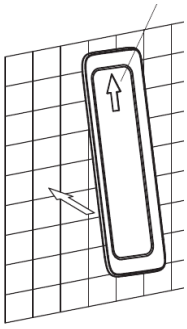

REMOTE CONTROL

Mount the remote holder

Pick a spot 750–1000 mm above the floor. Clean the wall, then stick the holder on with its adhesive, this side up.

Final check

With the water and power on, sit on the seat, run a rear wash and check every connection again for leaks. Fit 2 x AAA super alkaline batteries in the remote (not rechargeable or lithium).

Remote not responding? To pair it, hold Stop and Temperature on the remote until the temperature light blinks, then release. Press Stop on the side of the bidet, then Stop on the remote.

Troubleshooting & reference

Common issues, specifications and compliance

Troubleshooting

The bidet doesn't wash.
Check the power and water are on and the filter isn't blocked. The lid must be open and you must be seated so the seat sensor detects you.

Buttons don't respond after sitting down.
If it hasn't been used for 72 hours, it self-cleans for about 3 minutes when you sit. Buttons work again once it finishes.

Low water flow.
Raise the flow on the remote and check the supply pressure is at least 0.5 bar. A blocked filter can also reduce flow.

The nozzle is slow to come out.
This is normal. The nozzle self-cleans before it extends.

The remote doesn't work.
Check the batteries (the level light flashes when low). If needed, re-pair it as described on page 4.

The light flashes 6 times and beeps.
The supply water may be too hot. Turn off the power and water and contact us.

Specifications

Model	**InteliWash Retro (side inlet)**
Rated voltage	**AC 220–240V · 50/60 Hz**
Water connection	**G ½" · left-hand side**
Water pressure	**100–680 kPa**
Water supply temp.	**4°C – 35°C**
Operating temp.	**4°C – 40°C**
Power lead	**Right-hand side**
Protection	**IPX4**
Dimensions	**370 × 105 × 520 mm**
Net weight	**Approx. 7 kg**
Safe working load	**250 kg**
Remote batteries	**2 x AAA**
Filter replacement	**Approx. every 6 months**

Backflow & compliance

Supplied with a dual check valve, with an air gap in the water tank compliant with AS 2845.2. Install with appropriate backflow protection conforming to the National Construction Code, Volume Three, and AS/NZS 3500. Local authorities may require an RPZ valve, so check before installing.

WaterMark WMTS-051 · Lic 20094 · E5780

Need a hand?
Our Australian team is here to help with installation and spare parts.

1300 243 387
sales@thebidetshop.com.au