INSTALLATION GUIDE

InteliCare

Smart bidet seat · Step-by-step installation

For use by licensed plumbers. Read all steps before starting.



Before you begin

01
Licensed plumber
Install to the PCA and WMTS 051:2016, with backflow protection to NCC Volume Three.

02
Water off
Isolate the water supply at the wall tap before you start.

03
Power point
A 240V power point is required within 1.5 m, on the right-hand side of the toilet.

04
Reset the thermostat
Press the reset button on the side of the bidet before installing, or the water may not heat up.

Check the tap position. Looking at the toilet, the water inlet is on the left and the 1.5 m power lead on the right. This cannot be changed. If your tap is on the right, you'll need 1 m of ¼" white pipe and 2 x John Guest adaptors. If it's in the cistern, you'll need a ½" internal fitting kit, 1 x John Guest adaptor and 1 m of white pipe.

What's in the box

Tools needed: Phillips screwdriver and standard plumbing tools

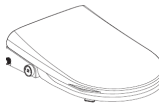
InteliCare bidet seat



Remote control (2 x AAA)


Remote holder


Holder screws & wall plugs


Double-sided tape


Screw cover


User manual

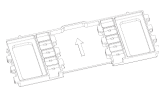
Fixation plate


Seat expansion bolts

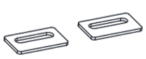
Adjustment sheets (2)

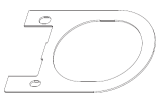
Install template

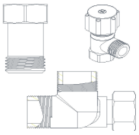
Tee valve set

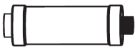
Water filter

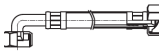
Flexible inlet hose

Fixing plate

Steps 1 – 6 · Secure the fixation plate to the toilet pan

1

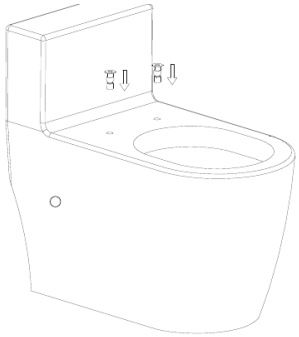

SEAT FIXING

Remove the old seat

Turn off the water at the wall tap, then unbolt and remove the existing toilet seat. Clean around the seat bolt holes.

2

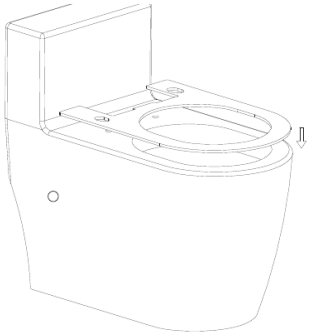

SEAT FIXING

Position the install template

Lay the install template on the pan and line its front edge up with the front of the bowl rim.

3

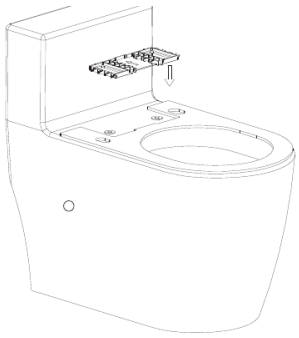

SEAT FIXING

Place the fixation plate

Set the fixation plate on the template over the bolt holes, with the arrow on the plate pointing toward the bowl.

4

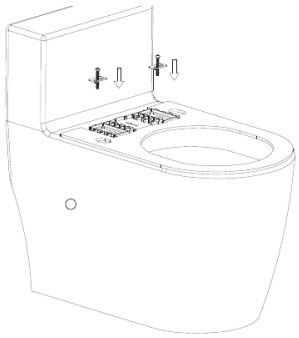

SEAT FIXING

Insert the expansion bolts

Push the seat expansion bolts through the slots in the fixation plate and into the seat bolt holes.

5

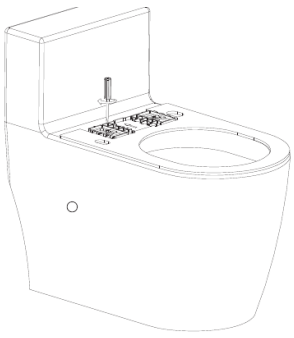

SEAT FIXING

Tighten the bolts

Tighten both bolts with a Phillips screwdriver until the plate is firm. The expansion fittings grip from above, so this suits fully concealed toilets too.

6

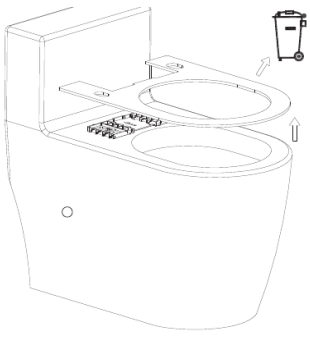

SEAT FIXING

Remove the template

Slide the install template out and discard it. The fixation plate stays secured to the pan.

Bidet & water connection

Steps 7 – 12 · Fit the bidet to the plate and connect the water supply

7

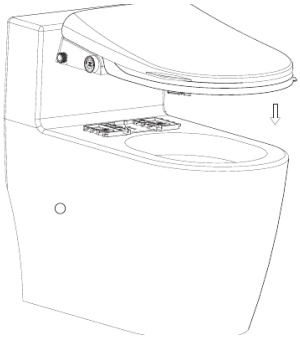

FIT THE BIDET

Lower the bidet

Lower the bidet onto the fixation plate, sitting it slightly forward of its final position.

8

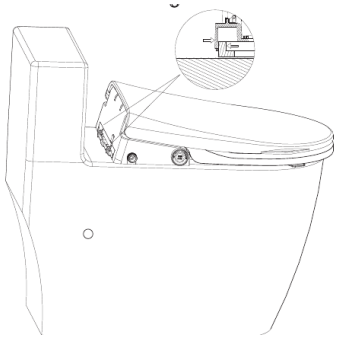

FIT THE BIDET

Line up the rear

Check the clips under the back of the bidet sit over the edge of the fixation plate, as shown in the detail.

9

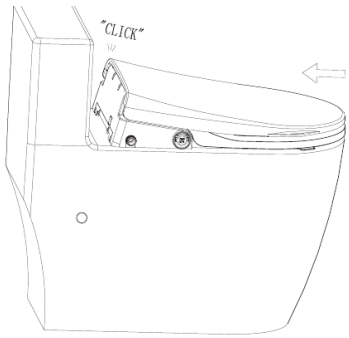

FIT THE BIDET

Slide back until it clicks

Push the bidet back toward the cistern until you hear it click into place. Give it a gentle pull to confirm it is locked.

10

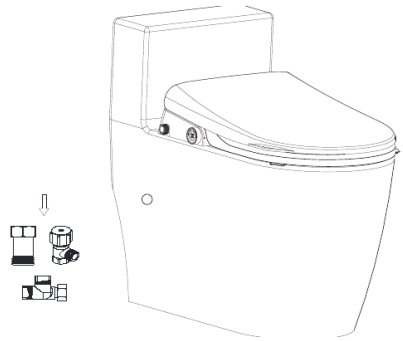

WATER CONNECTION

Fit the tee valve

Disconnect the cistern hose from the wall tap, then fit the tee valve to the tap outlet.

11

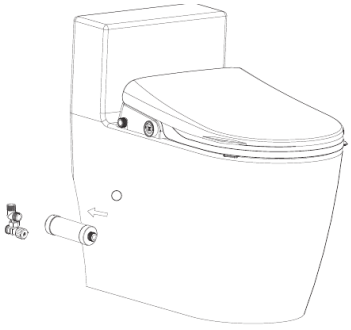

WATER CONNECTION

Attach the filter

Screw the water filter onto the side outlet of the tee valve.

12

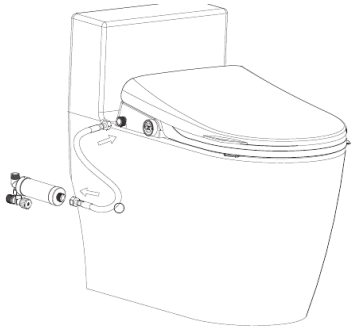

WATER CONNECTION

Connect the inlet hose

Connect the flexible inlet hose from the filter to the water inlet on the side of the bidet. Always use the new hose supplied, not the old one.

Water, power & remote

Steps 13 – 18 · Turn on the water, power up and mount the remote

13

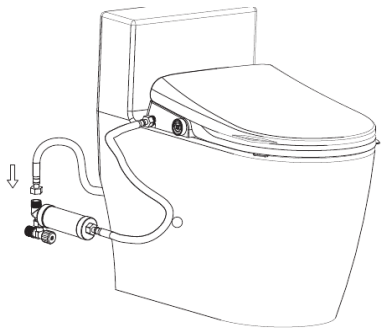

WATER CONNECTION

Reconnect the cistern

Reconnect the cistern hose to the top outlet of the tee valve.

14

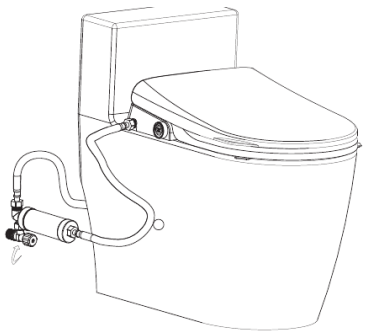

WATER CONNECTION

Turn the water on

Slowly open the tap and check every connection for leaks.

15

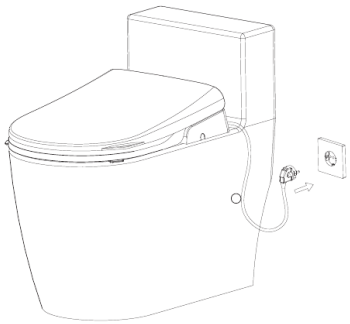

POWER

Plug in the bidet

Plug the power lead into the 240V power point on the right-hand side of the toilet.

16



POWER

Reset the safety switch

Press the RESET button on the in-line safety switch on the power lead to switch the bidet on.

17

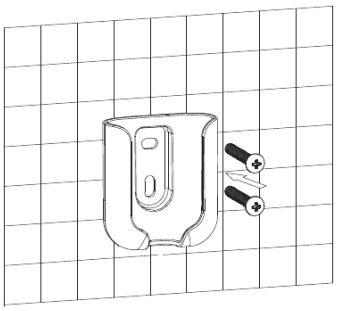

REMOTE CONTROL

Mount the remote holder

Choose a spot 750–1000 mm above the floor. Mark the holder holes, drill 2 x Ø6 mm holes 32 mm deep, fit the plugs and screw the holder on. Clip the screw cover over the screws.

18

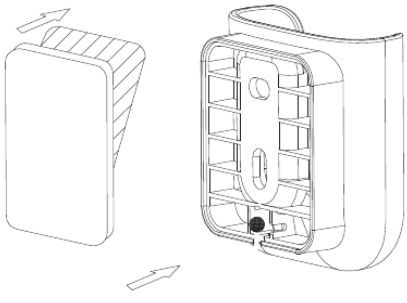

REMOTE CONTROL

No-drill option & dock the remote

Prefer not to drill? Clean the wall, stick the double-sided tape to the back of the holder and press it in place. Fit 2 x AAA batteries and slide the remote into the holder.

Finishing & reference

Final check, troubleshooting and specifications

Final check

With the water and power on, sit on the seat to activate the seat sensor, then run a rear wash and check every connection for leaks. The first wash takes a moment while the nozzle self-cleans.

Troubleshooting

The bidet doesn't wash.

Check the power and water are on and the filter isn't blocked. The lid must be open and you must be seated so the seat sensor is activated.

The water isn't warm.

Press the thermostat reset button on the side of the bidet (below), then raise the water temperature on the remote.

Low water flow.

Increase the flow on the remote and check the supply pressure is at least 0.5 bar (dynamic). A blocked filter can also reduce flow.

The nozzle is slow to come out.

This is normal. The nozzle self-cleans before it extends.

The remote doesn't respond.

Check the batteries. If the remote and bidet aren't paired, follow "One-on-One Setting" in the user manual.

The light flashes 6 times with constant beeping.

The supply water temperature is too high. Turn off the power and water and contact us.

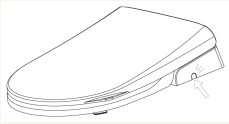

Thermostat reset button
Located on the side of the bidet body, as shown. Press it before first use.

Specifications

Model	InteliCare E553-0111
Rated voltage	AC 230V · 50 Hz
Power	1500 W
Water pressure	100–680 kPa
Water supply temp.	4°C – 30°C
Operating temp.	4°C – 40°C
Water connection	G ½" side inlet
Power cord	Approx. 1.5 m
Protection	IPX4
Dimensions	520 × 384 × 119 mm
Net weight	7 kg
Safe working load	250 kg
Remote batteries	2 x AAA (LR03)
Filter replacement	Approx. every 6 months

Backflow & compliance

This toilet douche seat is supplied with a dual check valve and has an air gap in the water tank, compliant with AS 2845.2. It must be installed with appropriate backflow protection conforming to the National Construction Code, Volume Three, and the PCA.

WaterMark WMTS-051 · Lic 20094 · E5780

Need a hand?

Our Australian team is here to help with installation and spare parts.

1300 243 387
sales@thebidetshop.com.au