INSTALLATION GUIDE

Eco EB-R500

Smart bidet seat · Step-by-step installation

For use by licensed plumbers. Read all steps before starting.



Before you begin

01
Licensed plumber
Install to the PCA and WMTS 051:2016, with backflow protection to NCC Volume Three.

02
Water off
Close the water feed valve and drain the toilet cistern before you start.

03
Power point
A 240V earthed power point is required within 1.5 m, on the right-hand side of the toilet.

04
Choose your bolts
Bottom and top fixing bolt sets are both supplied. Use the set that suits your toilet pan.

Check the tap position. Looking at the toilet, the water connection is on the left and the power lead on the right. This cannot be changed. If your tap is on the right, you'll need 1 m of ¼" white pipe and 2 x John Guest adaptors. If it's in the cistern, you'll need a ½" internal fitting kit, 1 x John Guest adaptor and 1 m of white pipe.

What's in the box

Lay out every part before starting · per the 2026 manual

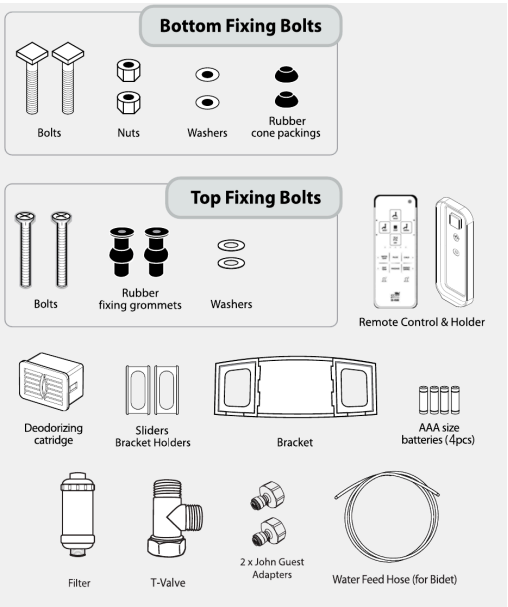

- **Eco EB-R500 bidet seat** (Regular or Elongated)
- **Bottom fixing bolts:** bolts, nuts, washers, rubber cone packings
- **Top fixing bolts:** bolts, rubber fixing grommets, washers
- **Bracket**, sliders and bracket holders
- **Water connection:** T-valve, filter, 2 x John Guest adapters and water feed hose (for the bidet)
- **Deodorizing** cartridge
- **Remote control**, holder and 4 x AAA batteries

Water connection & mounting

Steps 1 – 6 · Turn off the water, fit the T-valve and fix the bracket

1

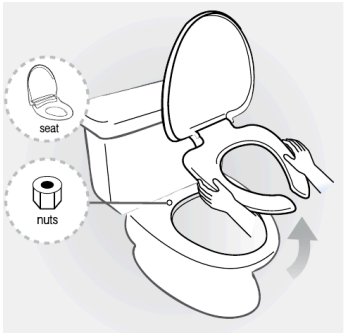

PREPARE

Remove the existing seat

Undo the nuts and remove the old seat and cover. Keep the seat and nuts in a safe place.

2

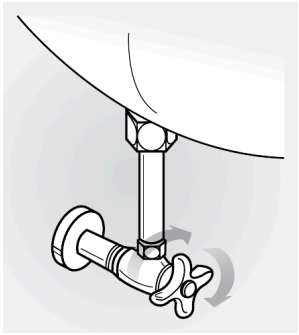

WATER CONNECTION

Turn off the water

Close the water feed valve by turning it clockwise, then flush to drain the toilet cistern.

3

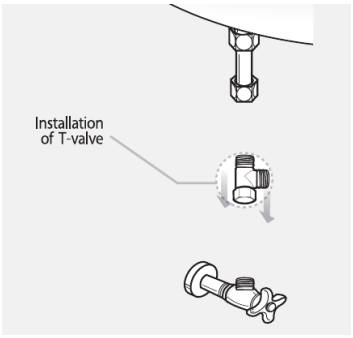

WATER CONNECTION

Fit the T-valve

Remove the existing water feed pipe and keep it safe. Fit the T-valve to the tap.

4

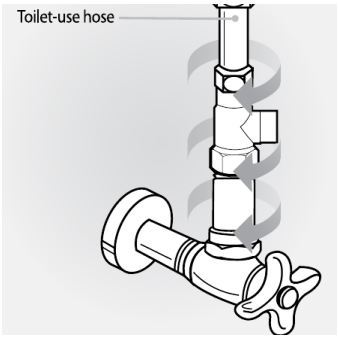

WATER CONNECTION

Connect the toilet hose

Connect the toilet-use hose from the top of the T-valve to the cistern.

5

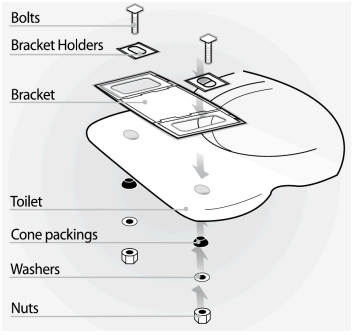

MOUNTING

Fit the bracket – bottom fixing

Place the bracket and bracket holders on the pan and fix with the bolts, cone packings, washers and nuts from underneath. Slide the bracket back or forward to line the seat up with the front of the pan before tightening.

6

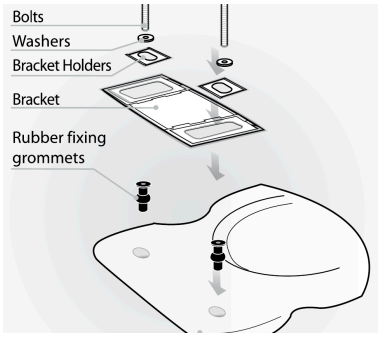

MOUNTING

Or – top fixing

For toilets without access underneath, fix the bracket from above with the top fixing bolts, washers and rubber fixing grommets. Line up with the front of the pan before tightening.

Fit the bidet & trial run

Steps 7 – 12 · Slide the bidet on, connect the filter and power up

7



MOUNTING

Slide the bidet on

Push the bidet body onto the bracket until it clicks into place. If it isn't fully home, it may leak.

8

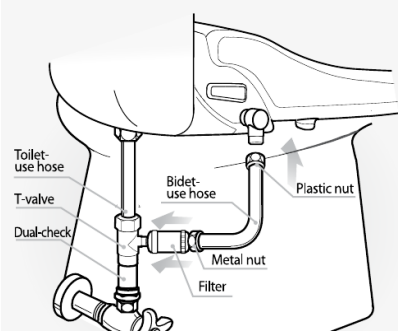

WATER CONNECTION

Fit the filter & bidet hose

Fit the filter to the side outlet of the T-valve, then connect the bidet-use hose from the filter to the bidet.

9

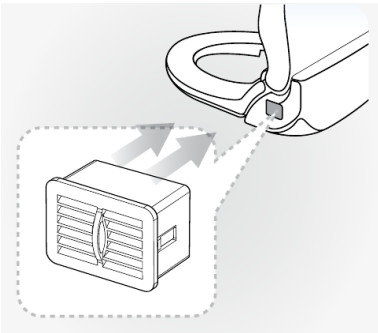

MOUNTING

Insert the deodoriser

Push the deodorising filter into the bidet body, then fit the deodorising cover.

10

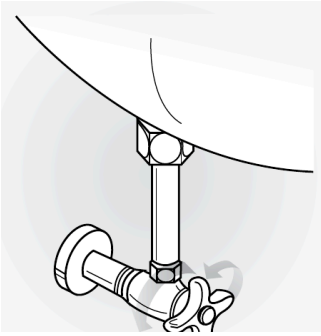

TRIAL OPERATION

Turn the water on

Open the water feed valve by turning it anti-clockwise.

11

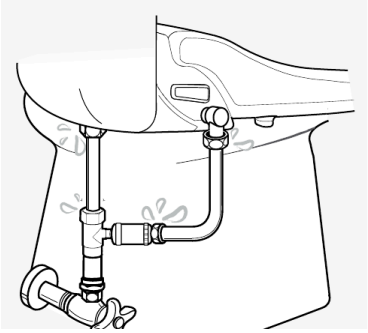

TRIAL OPERATION

Check for leaks

Check there are no leaks around every hose connection.

12

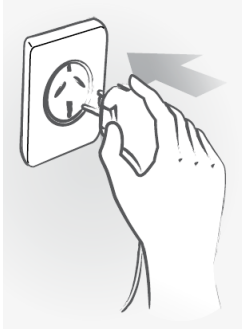

TRIAL OPERATION

Plug in the bidet

Plug into the 240V power point. The logo light on top turns on and the nozzle extends and retracts.

Sensor & remote control

Steps 13 – 16 · Test the seat sensor and set up the remote

13

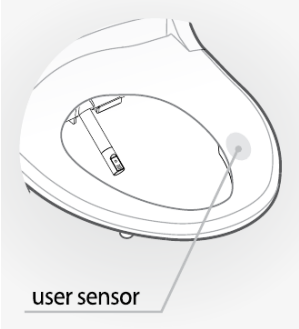

TRIAL OPERATION

Test the seat sensor

Place your hand on the user sensor on the seat. Water should come out of the drain hole for 1–2 seconds.

14

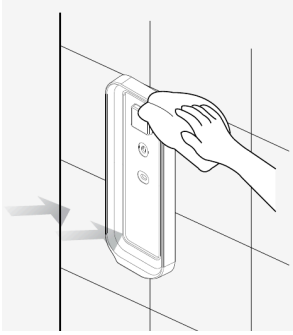

REMOTE CONTROL

Mount the remote holder

Remove the adhesive protection from the back of the bracket. Clean the wall thoroughly and press the bracket firmly in place.

15

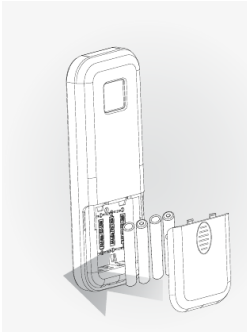

REMOTE CONTROL

Insert the batteries

Remove the back cover of the remote, fit the 4 x AAA batteries the right way round and close the cover.

16

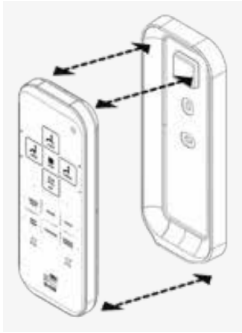

REMOTE CONTROL

Dock the remote

Hang the remote in the bracket the right way round, making sure it sits fully in place so it can’t fall.

Final check

With the water and power on, sit on the seat, run a rear wash and check every connection again for leaks. If the unit doesn't respond after changing the batteries, unplug it, wait 3 seconds and plug it back in.

Removing the bidet later? Unplug it, turn off the water and drain the cistern. Press the button on the side of the main body to drain the hot water tank, then press the release button and slide the bidet forward off the bracket.

Troubleshooting & reference

Common install issues, specifications and compliance

Troubleshooting

The bidet doesn't start a wash.
The seat sensor must be activated. Sit fully on the seat with skin contact; clothing over the sensor can stop it working.

Leaking at the bidet.
The bidet may not be fully on the bracket. Push it firmly until you hear a click.

Water pressure is weaker than usual.
Debris may be caught in the screen filter in the water inlet. Turn off the water, unplug, remove the filter with long-nose pliers, clean it with a toothbrush and refit.

All the remote's lights are blinking.
The batteries are flat. Replace all 4 at once; don't mix old and new.

The remote doesn't respond after new batteries.
Unplug the bidet, wait 3 seconds, then plug it back in.

The indicator lights flash in a pattern.
This is an error code. Note which lights are flashing and contact us so we can help.

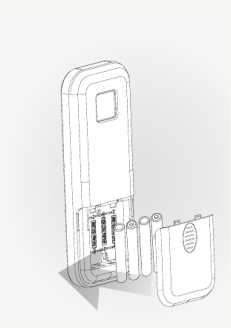

Replacing remote batteries
When all the LEDs on the remote blink, replace the AAA batteries.

Specifications

Model	**Eco EB-R500 (Regular / Elongated)**
Rated voltage	**AC 240V · 50 Hz**
Max power	**1,670 W**
Water pressure	**100–680 kPa**
Power cord	**1.8 m · right-hand side**
Regular	**406 × 498 × 145 mm**
Elongated	**406 × 528 × 145 mm**
Net weight	**4.5 – 4.7 kg**
Safe working load	**180 kg**
Protection	**IPX4**
Remote	**4 x AAA batteries**
Filter replacement	**About every 6 months**

Backflow & compliance
Conforms to AS 2845.2 Minimum Air Gap / AVB with a supplementary dual check valve. It must be installed with appropriate backflow protection conforming to the National Construction Code, Volume Three, and the PCA.

WaterMark WMTS-051 · Lic 20094 · E5780

Need a hand?
Our Australian team is here to help with installation and spare parts.

1300 243 387
sales@thebidetshop.com.au