ECO BIDET®

EcoBidet © 2018

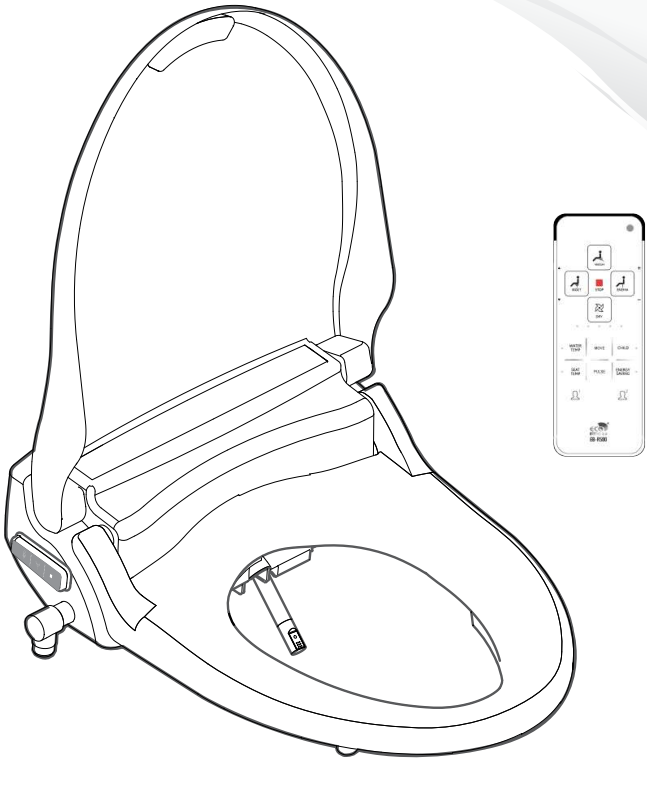

User's Guide Electrical Bidet

Be sure to read this user's guide carefully before use.

220V ~ 240V, 50/60Hz

www.ecobidet.com/support

ECO BIDET®

EB-R500

Please Scan for

Installation Videos,
User Guides,
Warranty Information
& Customer Support.

WMTS 051
20094

E5780

JAS-ANZ

ABCB

IPX4

WARNING: THIS TOILET DOUCHE SEAT MUST BE INSTALLED WITH APPROPRIATE BACKFLOW PROTECTION CONFORMING TO THE NATIONAL CONSTRUCTION CODE - VOLUME THREE AND THE PCA.

ECO BIDET®

THIS UNIT WAS MANUFACTURED FOR HOUSEHOLD USE ONLY.
READ ALL OPERATING INSTRUCTIONS BEFORE INSTALLATION.

Notes

1. This product should be installed according to this manual.
2. Please read this manual carefully and install properly.
3. Please save this manual and place an easily accesible location.
4. Do not attempt to service this appliance yourself. Doing so could void warranty.

CONTENTS

1. Safety Instruction 4
2. Product Characteristic 8
3. Designation of Each Component 9

4. Installation 13
5. Trial Operation 19
6. Disassembly of Product 20

7. How to Use the Product 22
8. User Setting Facilities 26

9. Maintenance & Cleaning 28
10. Before requesting repair 31
11. Product Specifications 32
12. Comparison Chart 33
13. Warranty & Support .....

01.Safety Instructions

● Each symbol refers to the followings:

⚠ Warning	Risk of electric hazard when violating the instructions
⚠ Caution	Risk of injury or material damage when violating the instructions

● Each pictorial indication means the followings:

means prohibited

- Disassembly is not allowed
- Don't touch with wet hand
- Use of fire prohibited
- Don't spray water
- General prohibition

means obligated

- Obligatory Instruction
- Grounding Connection

⚠ Warning

Disassembly, modification or repair is not allowed.

▶ Risk of electric shock or fire.

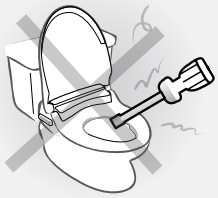

Don't plug or touch
the power cord with wet hands.

▶ Risk of electric shock.



Don't spray water on the main body
of product or power plug.

▶ Risk of electric shock or fire



Don't use the damaged power cord or outlet.

▶ Risk of electric shock or fire

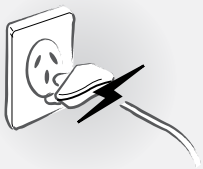

⚠Warning

Don't fail to do grounding.

- Always use the outlet that encloses the earth electrode (Earth terminal mounting outlet-check if there is earth or not).
- In case there is no earth electrode, do grounding separately.
- When it is not grounded, it causes the failure and electric shock.

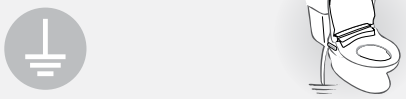

Insert the power plug correctly in 240V exclusive outlet.

- Risk of heat or fire.

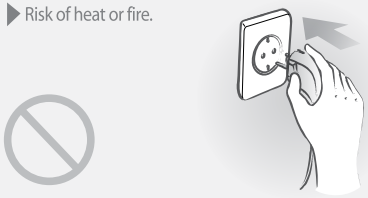

Don't use cigarettes or flammable materials near the product ; Don't throw the cigarette into the product.

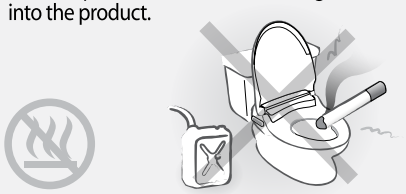

Don't connect the product to industrial water pipe.

- Risk of causing dermatitis of user.

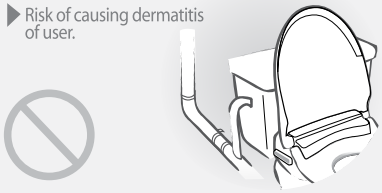

Don't connect power to the product before its complete installation on the toilet.



When the power cord or plug is damaged, always inform the service center, and replace if required.



Don't block the dryer hole nor put any object or hand on the hole.

- Risk of burn or electric shock.

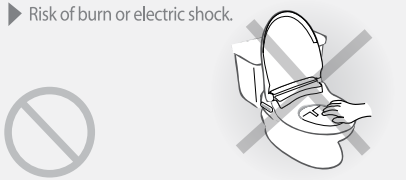

When removing the product from toilet, always unplug the power first.

- Risk of electric shock.

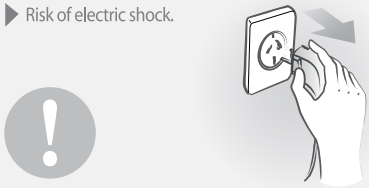

01.Safety Instructions

⚠Caution

Don't stand on the product ; don't put heavy object on it.

▶ Risk of injury or damage to the product.

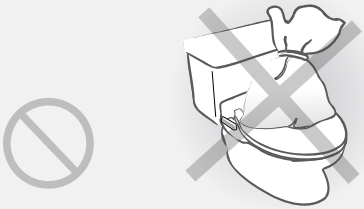

Don't force to close the cover of toilet.

▶ Risk of failure.

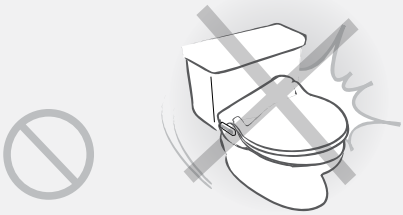

Don't lean against the cover of toilet.

Risk of failure.
Can cause cracking of seat and hinge failure



When cleaning, use dish detergent onl .
No benzene, thinner, toilet-use detergent, cream/abrassive cleaners etc.

▶ Risk of damage to the product or crack or staining.

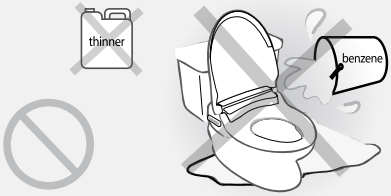

Don't bend the connecting hose ; don't force to pull it out.

▶ It may cause stoppage of water supply or leakage.

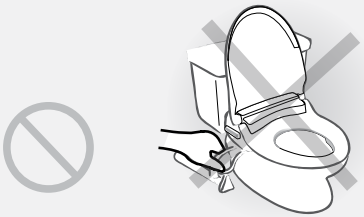

Be cautious low temperature burn.

▶ When the skin has been in contact with a seat for a long time, it may cause low temperature burn. The seat temperature should be set on Low or off when the unit is used for children, elderly persons, persons who cannot control the temperature by themselves.



⚠ Caution

When the product is not used for an extended period of time, remove the power plug and drain the water out of the product tank and water off at the wall.

- It may cause the water rotten and result the skin disease.



Don't use an out of order/faulty product.

- When it is out of order, remove the plug from the outlet and inform the service center.
- Otherwise, it may cause fire or electric hazard.



When installing, push it in until it sounds 'Click'.

- It may cause water leakage or mal-operation.



Don't place the removed product upside down.

- Risk of the product failure.



⚠ Warnings

This appliance is not intended for use by persons (including children) with reduced physical, sensory or mental capabilities, or lack of experience and knowledge, unless they have been given supervision or instruction concerning use of the appliance by a person responsible for their safety.

Children should be supervised to ensure that they do not play with the appliance

02. Product Characteristics

bidet has the following characteristics:

Continuous Warm Water Supply

Enjoy continuous warm water throughout the wash cycle.



Enema Wash

Soft but powerful water wash for added cleansing benefit.



Bubble Wash

Aerated water wash adds cleaning comfort.



Massage

Nozzle moves back and forth for massage effect.



Pulse

Pulsating wash repeatedly cycles from weak to strong.



Deodorization Function

Deodorizing filter provides odor-free during use.

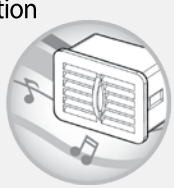

Energy Saving Function

It finds out the time frame when used frequently, realizing the maximum energy saving effect.



Child Settings

Specialized nozzle position and water pressure for children.



Touch panel remote control

Convenient touch screen remote control provides easy user interface.



User Preset

User can preset and store the memory for control setting



03.Designation of Each Component

Main Body

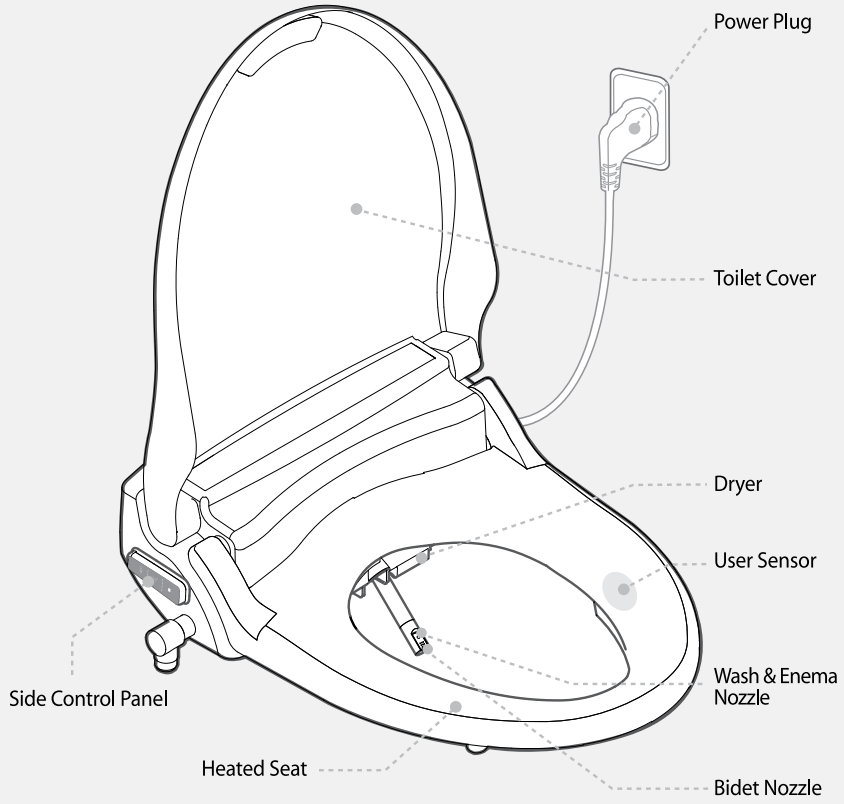

※Occupied seat sensor

• The occupied seat sensor must be activated to operatthe product. Sensor can be turned deactivated.

Does check if the bidet fits your toilet?

Regular Seat

This Bidet will fit on your existing toilet suite if the measurements of your pan are:

A: 480mm or above
B: Between 140-195mm
C: 320mm or above*
D: 400mm or above

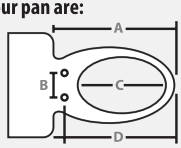

Elongated Seat

This Bidet will fit on your existing toilet suite if the measurements of your pan are:

A: 520mm or above
B: Between 140-195mm
C: 340mm or above
D: 440mm or above

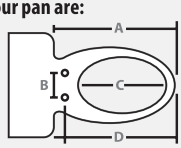

* At 320mm once installed some porcelain my be visible. 330mm is the preferred size.

03. Designation of Each Component

Remote Panel

WASH
To run the wash function
(1 minute)

STOP
To stop any operations

BIDET
To run the bidet function
(1 minute)

▲
▼
To control the nozzle position

MOVE
To run the Move nozzle function
during Wash/Bidet/Enema wash.

WATER TEMP
To control water temperature
(off/low/mid/high)

SEAT TEMP
To control seat temperature
(off/low/mid/high)

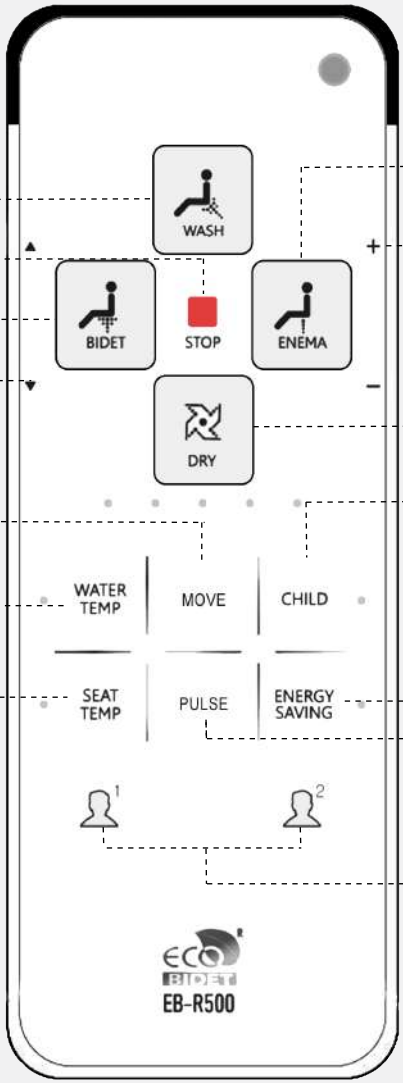

ENEMA WASH
To run the Enema wash function
(2 minutes)

+/-
To control water pressure
To control dry temperature

DRY
Start Dry function
(3 minutes)

CHILD
Children safety and automatic mode

ENERGY SAVING
Automatic mode
Learning energy saving mode
Releasing energy saving mode

PULSE
To run the Pulse function during
Wash/Bidet/Enema wash.
Water pressure is rhythmically
changed from strong to weak.

USER PRESET
User can preset and store the memory for control setting

03. Designation of Each Component

Operation Panel

Depending on the toilet pan style use either suuplied '**Bottom Fixing Bolts**' or '**Top Fixing Bolts**'.

Bottom Fixing Bolts

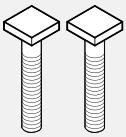
Bolts


Nuts


Washers


Rubber cone packings

Top Fixing Bolts

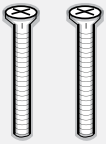
Bolts

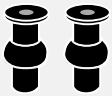
Rubber fixing grommets


Washers


Remote Control & Holder

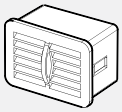
Deodorizing catridge

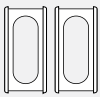
Sliders Bracket Holders

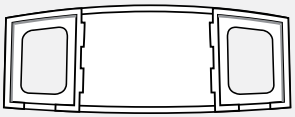
Bracket


AAA size batteries (4pcs)


Filter


T-Valve


2 x John Guest Adapters

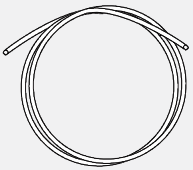
Water Feed Hose (for Bidet)

04. Installation

Order of Installation

1 Remove the seat from the existing toilet body.

- Release the nuts, and then remove the seat and cover from it.
- Keep the removed seat, cover and nuts well in a proper place.



2 Close the water feed valve by turning it clockwise, and then drain the toilet water tank out.

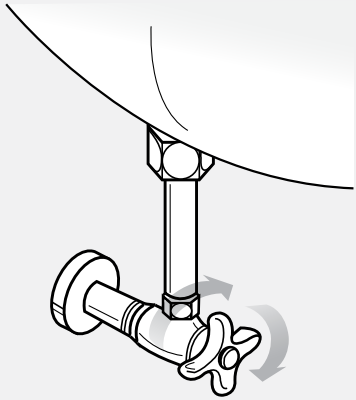

3 Remove the water feed pipe and then install T-valve.

- Keep the removed water feed pipe well in a proper place. It may be useful when moving house to other place later.

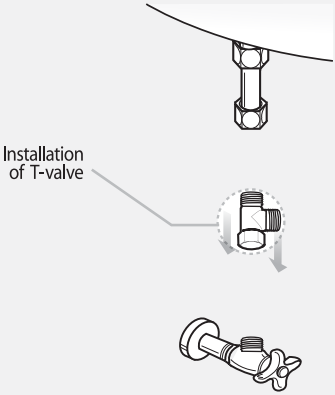

4 Connect the toilet-use hose.

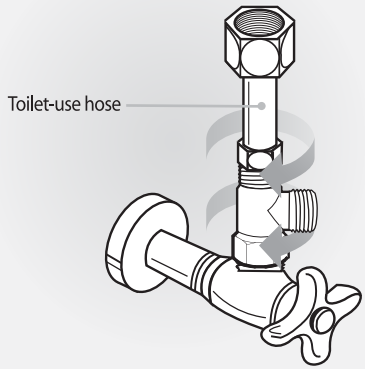

5 Fix the bracket onto the toilet first.
If 'Top Fixing Bolts' are required,
see 'Accessories List'.

BOTTOM Fixing Bolts

- If 'Top Fixing Bolts' are needed then see 5a
- Adjust the seat and the front part of toilet back and forth so that they can correspond with before fastening the nuts.

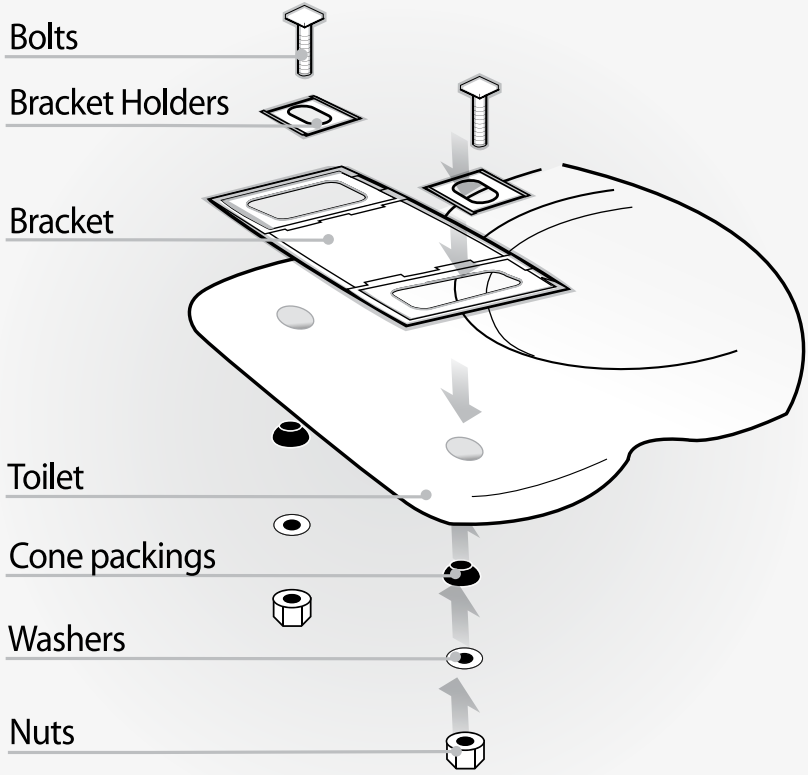

5a If 'Top Fixing Bolts' are required then fix the bracket onto the toilet first with these.

TOP Fixing Bolts

▶ Adjust the seat and the front part of toilet back and forth so that they can correspond with before fastening the nuts.

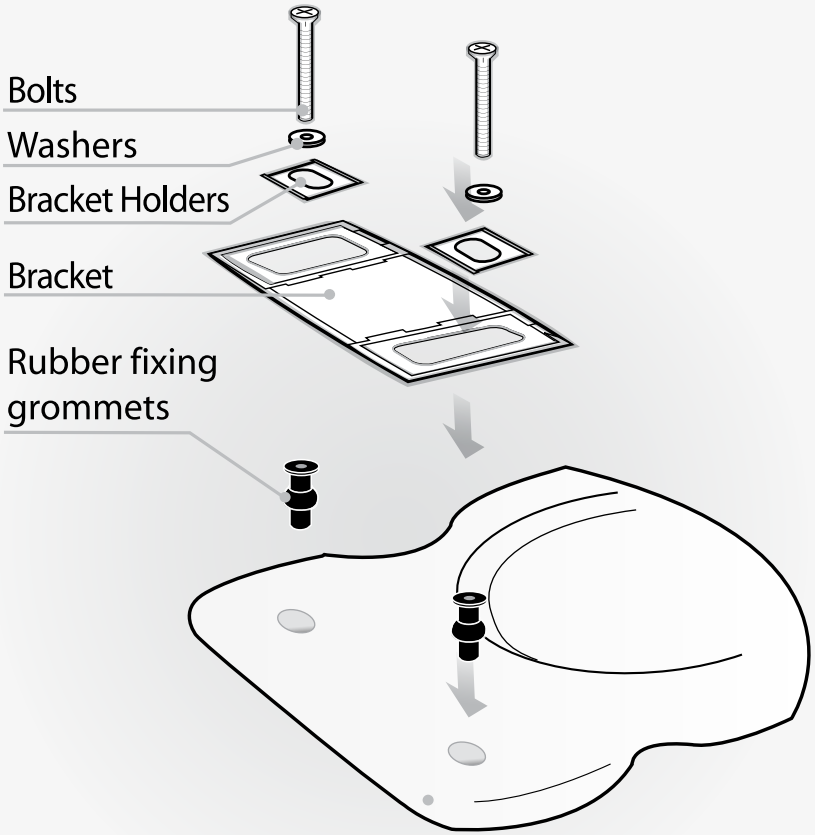

04. Installation

6 Push the main body toward the bracket completely.



- Push it in until it sounds 'click'.
- When the product is not installed well, it may cause leakage.

7 After installing the filter onto the T-valve, connect the bidet-use hose to the bidet body using the John Guest Adapters.

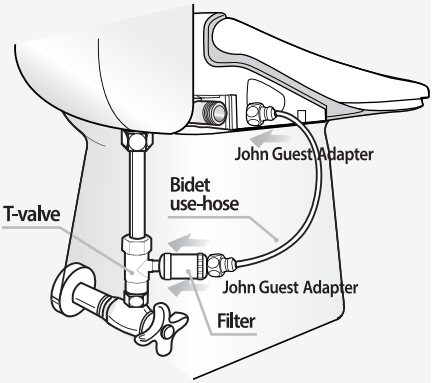

8 Insert the deodorizing cartridge into the bidet body.

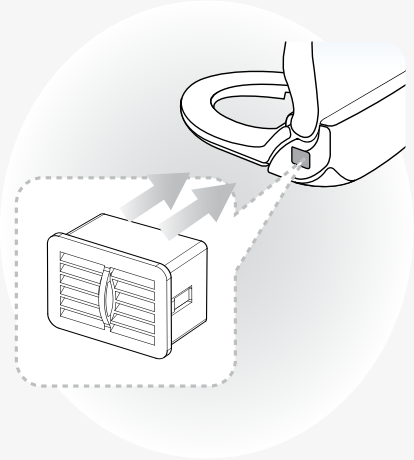

04. Installation

Remote control installation & batteries insertion

1 Remove the adhesive protection to attach the remote control bracket.

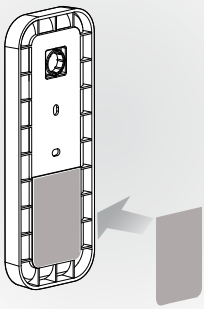

2 Clean the place thoroughly to attach the bracket.

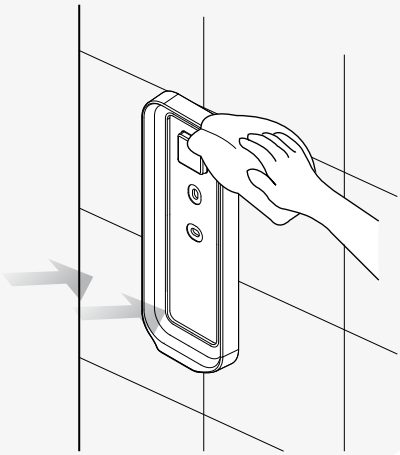

3 Remove the back cover and place supplied batteries with correct direction.
Close the back cover.

※ **Caution**
Failure to install the batteries properly could cause damage or faillure of the remote control unit.

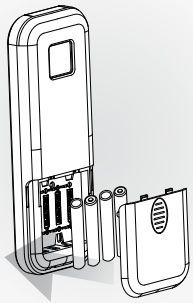

4 Place the remote control in the bracket with correct direction.
When placing it, take care to hang it on the bracket completely. Failure of placing could cause the remote control falling down.

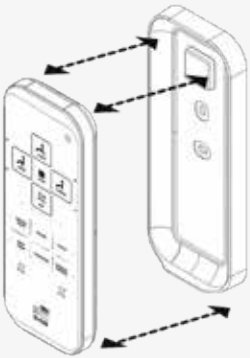

04. Installation

5 When the batteries have reached the end of service life, all LEDs will blink.
Replace the batteries with new ones, AAA size X 4pcs.

※ **Caution**
Do not use old and new batteries together.
This could cause damage or failure of the remote control.

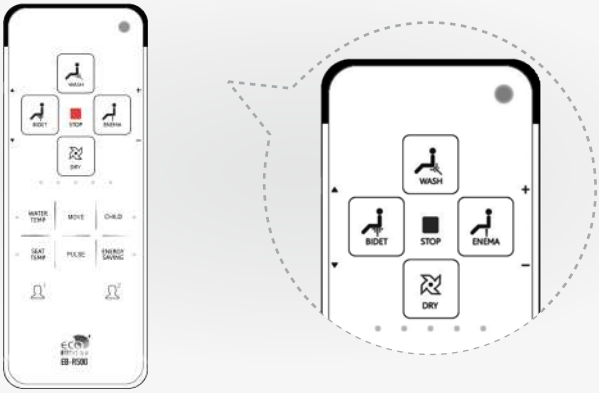

6 If the unit does not work after replacing the batteries, unplug and wait for 3 seconds.
Plug in again, and the unit will be ready for use.

※ After replacing the batteries, ID of the unit will be initialized as "00" (factory initialization ID), and its ID will be equalized ID of the remote control that reaches the unit first.
This ID assigning function will be needed to prevent signal interruption if more than 2 units are used at one place. In case of using one unit only, user can use the unit accordingly without setting.

※ If you want to change the ID, please refer to the page 22. for "Remote Control ID Setting"

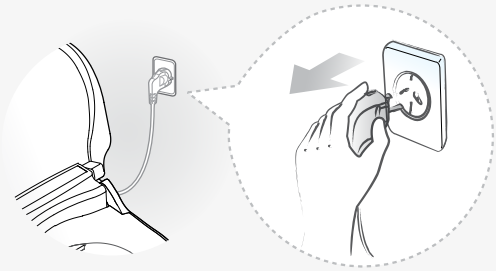

05. Trial Operation

Order of Trial Operation

1 Open the water feed valve by turning it anti-clockwise.

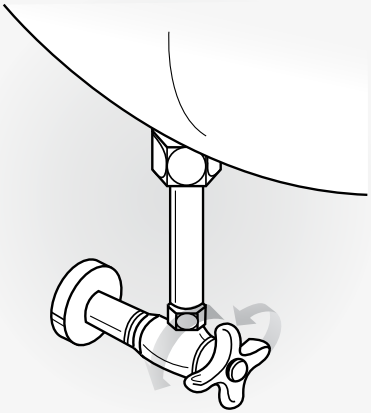

2 Be sure of no leakage around the hose connection.

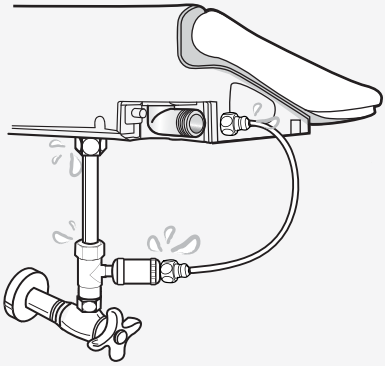

3 Be sure that logo light on the top turns on and nozzle comes and retracts when powered on.

▶ Don't plug the power cord with wet hands. Risk of electric shock.

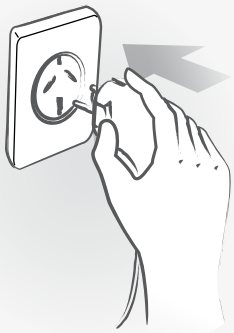

4 Put the hand on the user sensor part of the seat, check if water comes out from drain hole for 1~2 seconds .



06. Disassembly of Product

Order of Disassembly

1 Remove the power plug from the outlet.

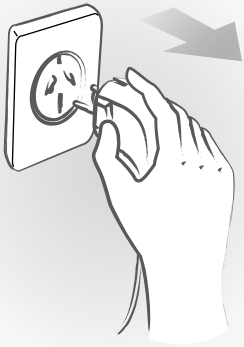

2 Close the water feed valve by turning it clockwise, completely drain out the toilet water tank, release the nuts at bidet body of the bidet hose, and then remove them from main body.

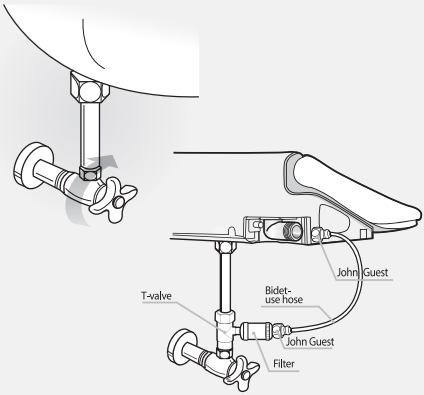

3 Press the button on the side of bidet, completely drain the water out of the of the main body. While keep on pressing the button, pull the main body forward, and then remove it from the toilet.

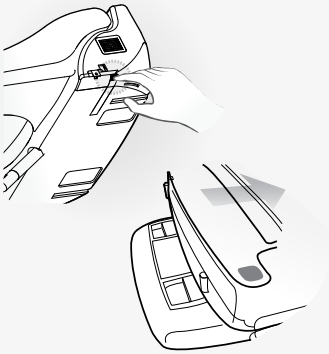

4 Release the nuts, and then remove the brackets from the toilet.

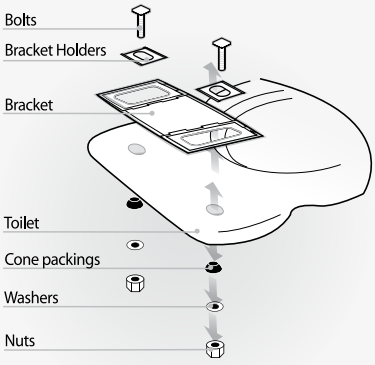

5 Remove bidet hose, toilet-use hose and T-valve.

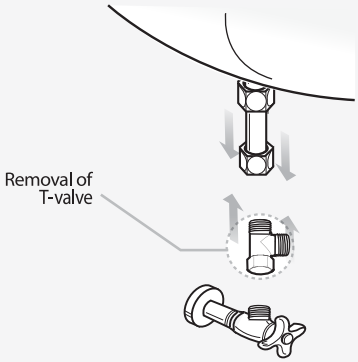

6 Connect the water feed pipe that was removed when the bidet was installed.

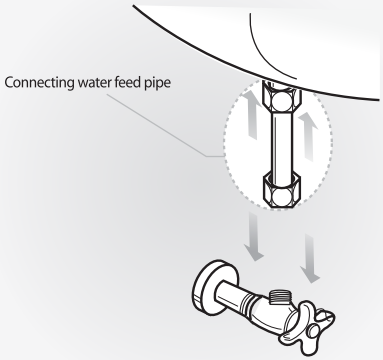

7 Open the water feed valve by turning it anti-clockwise. Be sure of no leakage around the water feed connection.

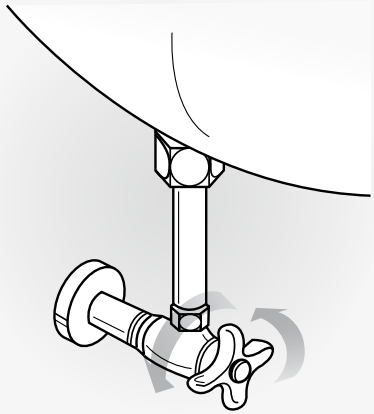

8 Attach to the toilet the seat and cover that were removed when the bidet was installed.



07.How to Use the Product

Basic Operation Method

1 Sit on the toilet seat.

- Deodorization function starts automatically.
- When sitting on the toilet seat, be seated so the user sensor to be occupied. (Otherwise, it may not normally operate due to detection problem)

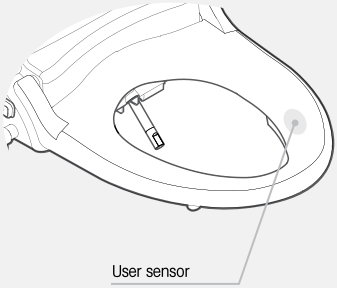

2 Press WASH, BIDET, ENEMA WASH buttons.

- Selected function can be used as desired. (When selecting Enema Wash function, MASSAGE function cannot be used.) (When selecting Child function, Enema Wash function may not operate)
- Specialized water spray in Enema Wash function enters into the rectum, and then help relieve constipation and fecal stasis.



3 Press the DRY Button.

- "Dryer temperature is adjustable by pressing "HI" and "LO" buttons."
- Hot air indicator lamp will lights on. (5 levels available)
- Selected function may be used for three (3) minutes.
- Drying effect will be improved if you wipe the moisture lightly before operating the drying function.



4 Press the STOP Button.

- Selected functions stop.
- Press "STOP" on the side control panel for 3 seconds to turn off the unit.



5 MOVE Wash

- When pressing the MOVE button during the operation of WASH and BIDET, nozzle location will be moved back and forth to wash the wider range.
- When pressing the CHILD button during the operation of MOVE, the moving distance can be adjusted within 5 steps.
- MOVE function will not operate during the operation of ENEMA WASH.

MOVE

6 PULSE Wash

- When the pressing PULSE button during the operation of WASH, BIDET and ENEMA WASH, water pressure will repeat HIGH/LOW level for smooth pulsating wash.

PULSE

7 Water Pressure Control

- Pressing + / - button enables the control of water pressure.
- When any foreign material blocks the water pipe filter, it may cause the low water pressure. Regularly check it for its stable use.

+

-

8 Nozzle Position Control

- During the operation of WASH, BIDET and ENEMA WASH, Nozzle position can be controlled by pressing ▲/▼.

▲

▼

1. After enema wash, eliminate the water from your rectum completely.
2. If the concentrated water stream is not pointing at the center of posterior, it may bring some pain or water splashes abnormally.
3. If the anal disease patient uses enema function, it may bring some pain or bleeding for the first several times.
4. Excessive use of enema wash may aggravate constipation.

07.How to Use the Product

Basic Operation Method

9 CHILD Function

- When the unit is used by a child, press the CHILD button first (Child function lamp will light on.), use the WASH and BIDET function. Nozzle position, water/seat temperature and pressure are automatically adjusted for children.
- Nozzle position and water pressure can be adjusted within 5 steps as desired.
- When selecting CHILD function,control range of seat temperature will be dropped to the room temperature, (34℃/36℃/38℃)
- Enema Wash function will not operate during the operation of CHILD function.

CHILD

10 Seat Temperature Control

- When pressing the SEAT TEMP. CONTROL button, the temperature of seat can be controlled within the range of room temperature, (34℃/38℃/42℃)
- If the seat temperature reaches 34℃ or more, the seat temperature indicator turns in RED. If not(under 33℃), it remains in BLUE.

SEAT TEMP

11 WATER TEMP CONTROL

- When pressing the WATER TEMP. CONTROL button, the temperature of water can be controlled within the range of room temperature, (34℃/36℃/38℃)

WATER TEMP

12 Energy saving modes

- Automatic ECO save mode
  - This mode will be activated by pressing the Energy Saving button until red LED lamp lights on.
  - Seat will be kept at 32℃.
  - In case of seat temp. is off, seat temp. will remain at off.
- Learning ECO save mode
  - This mode will be activated by pressing the ECO Saving button until blue LED lights on.
  - Seat temperature will be kept at 32℃. when it is not occupied, and raise the temperature back to preset level according to memorized time of use.
  - It may take 5 ~ 7 days to let the unit memorize the usage pattern.
- Release ECO save mode
  - Press the ECO Saving button until LED is off to release the energy save modes.
- This unit adopts the instant heating technology for water heating and does not consume the energy for water heating when it is in stand by mode.

13 Deodorizing function

- When sitting on the seat, automatically the deodorizing function starts.
- Speed of deodorizing fan can be controlled. (refer to the User setting facilities, P.22)
- After the usage of bidet, the deodorizing function will operate for one (1) minute.

14 Nozzle Cleaning

- Press the Wash button on the side control panel for 3 seconds, and then the nozzle will move forward and stop (for 2 minutes)
- When pressing STOP button, the nozzle will return and operate self-cleaning operation.



15 OPERATION

USER PRESET

- Nozzle position, water pressure, dry/water/seat temperature can be preset for 2 different users.
- How to preset
  1) Adjust nozzle position, water pressure, dry/water/seat temperature to your preference.
  2) Preset 1: Press STOP button and simultaneously for 3 seconds.



Preset 2: Press STOP button and simultaneously for 3 seconds.



  3) Press the STOP button or just wait to complete.

- Using the Preset Features
  1) Press the selected preset button
  2) Preset nozzle position, water pressure and temperatures will be activated.



08. User Setting Facilities

8-1. User setting with the remote control

● : Seat Switch 'Off' Status ○ : Seat Switch 'On' Status ◐ : Regardless of On/Off

<table>
<tr><th>No</th><th>Function</th><th>Seat Status</th><th>Switch Operation</th><th>Description</th><th>Initial Status</th></tr>
<tr><td>1</td><td>Selecting the speed of deodorizing fan</td><td>◐</td><td>

Press STOP and ECO SAVING for 3 seconds. Then adjust the fan speed by pressing " + " or " − " button. Leave the remote alone for 5 seconds to complete the setting.</td><td>
<table>
<tr><th rowspan="2">Stop + ENERGY SAVING</th><th colspan="2">Fan speed</th><th rowspan="2">Display of ECO saving (blinking)</th></tr>
<tr><th>Occupied</th><th>Unoccupied</th></tr>
<tr><td>Default</td><td>High</td><td>High</td><td>Red</td></tr>
<tr><td>3 sec</td><td>Off</td><td>Off</td><td>OFF</td></tr>
<tr><td>5 sec</td><td>Low</td><td>Low</td><td>Blue</td></tr>
<tr><td>7 sec</td><td>Low</td><td>High</td><td>Pink</td></tr>
<tr><td>9 sec</td><td>High</td><td>High</td><td>Red</td></tr>
</table>
</td><td>High speed in occupied mode. High speed in unoccupied mode.</td></tr>
<tr><td rowspan="2">2</td><td>Remote control ID setting</td><td>◐</td><td>MASSAGE
Press MASSAGE for 3 seconds. Then set the ID 0~3 by pressing " + " or " − " button. Leave the remote alone for 5 seconds to set the ID.
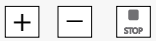

Change the ID by pressing " + " or " − ", and press "STOP" to set the ID</td><td>
<table>
<tr><th>ID</th><th>LED Colour</th></tr>
<tr><td>0</td><td>OFF</td></tr>
<tr><td>1</td><td>Blue</td></tr>
<tr><td>2</td><td>Pink</td></tr>
<tr><td>3</td><td>Red</td></tr>
</table>
</td><td rowspan="2">ID "0"</td></tr>
<tr><td>Remote control ID change</td><td>◐</td><td>If batteries of remote control changed, set the ID again as it is shown above.</td><td>ID will be automatically changed to "o" in case of battery replacements.
After changing the ID or battery replacement, plug out the main unit for 5 seconds and plug in again for ID pairing.
*No need ID pairing or unplugging process if ID "0" is set.</td></tr>
<tr><td colspan="6">Tip. If washing time is set at 3 minutes or longer, sitz bathing will be possible.</td></tr>
<tr><td>3</td><td>Night light Setting</td><td>◐</td><td>+
Press the " + " for three seconds.</td><td>Night light can be turned on and off by pressing the " + " button.</td><td>Night light is turned on.</td></tr>
</table>

8-2. Extra functions with side contol panel

● : Seat Switch 'Off' Status ○ : Seat Switch 'On' Status ◐ : Regardless of On/Off

No	Function	Seat Status	Switch Operation	Description
1	Nozzle cleaning	●	Press "WASH" for longer than 3 sec.	Nozzle will move forward for cleaning.
			Press "STOP"	Nozzle will retract and clean itself.
2	Power off	●	Press "STOP" for 3 sec.	Press one of "STOP", "WASH", or "BIDET" to power on.
3	Initialization	●	Press "STOP" for longer than 5 sec.	All settings will be initialised.

09. Maintenance & Cleaning

Cleaning of Water pipe filter

1. Close the water feed valve by turning it clockwise.
2. Disconnect the water supply hose. Take the screen filter out and clean it with soft brush. (e.g. toothbrush)
3. After cleaning, place it back. Then connect the water supply hose.
4. Open the water feed valve by turning it anti-clockwise.

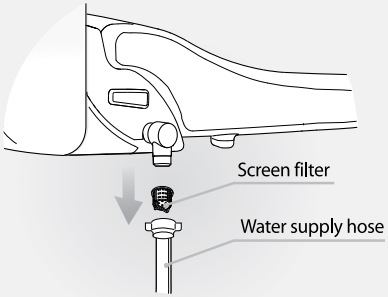

Cleaning of Nozzle

1. Press the Wash button on the side control panel for 3 seconds, and then the nozzle will move forward and stop (for 2 minutes)
2. Clean the nozzle with a unused toothbrush, etc., and press the STOP button, then it will return to the original place for self cleaning.



Cleaning of Bidet Body

1. Exterior surface of unit is made of plastic material, which may be damaged by scrubber, chemicals, etc.
2. Wipe the surface with a soft damp cloth. Do not spray water directly onto the surface.
3. Clean the body after removing the power plug from the oulet. Be sure no water splashes into the power plug or outlet.
4. Be careful of not dropping any chemical detergents of toilet cleaner on the water supply hose. Risk of the hose damage.

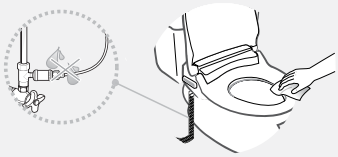

Drainage of Hot Water Tank

1. Remove the power plug from the outlet.
2. Close the water feed valve by turning it anti-clockwise.
3. Press the button on the side of main body.

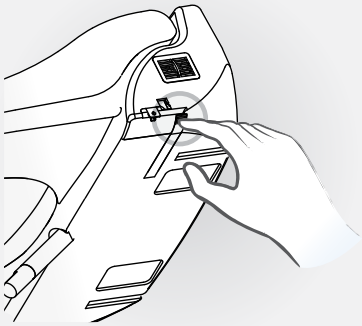

Maintenance during winter season (for freeze protection)

When bidet seat is not used for an extended period of time, either;
Leave unit plugged in and turned on **OR** Unplugged and drain the unit.

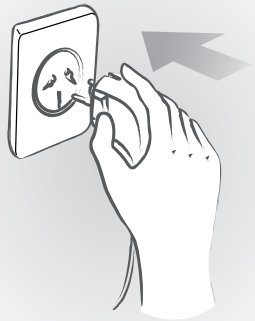

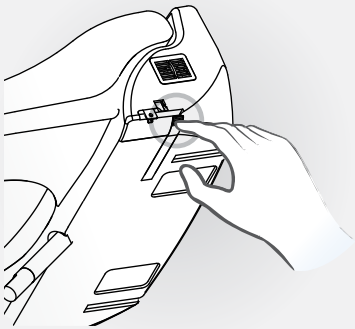

FILTER REPLACEMENT

The manufacturer recommends that you change the filters on average every 6 months to protect the internal heating and water temperature regulating controls of your electronic bidet product and to stop build up and clogging of the micro galleries that could cause leaking or malfunction.

If a filter is over 12 months old the filter plastic may deteriorate and leak.

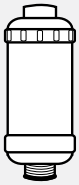

Filter

09.Maintenance & Cleaning

Do not throw away

We are committed to protection the environment.
Please help us by disposing of this product in a responsible way when it reaches the end of its service life, to prevent certain substances contained in electric and electronic products from harming public health or the environment. The symbol means that the products must not be thrown away with other household waste: at the end of its service life, it must be taken at no charge to you to the waste-collection centers provided for the purpose by the authorities in your country.
Or to be distributor from whom you purchase a new product that is equivalent to or that performs the same functions as this product. This latter option may not be available in some countries.

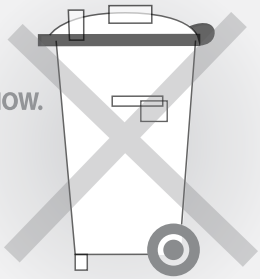

You may be able to trade-in your product. ASK US HOW.

www.ecobidet.com/support

10. Before requesting repair

※ Please check the following points before requesting the repair of the product.

Signs to occur	Matters to be checked
Completely out of operation	• Check if the power plug is not connected. • Check the power failure.
Water does not spray out	• Check if the water supply is suspended. • Check if water feed valve is locked • Check if nozzle is blocked by foreign material • Check if connection hose is bent
Water pressure is low	• Check if water pipe filter is blocked by foreign material. • Check if the water pressure is set at too low level
Water is not warm enough	• Check if its temperature is set at 'Off' or 'Low'.
Seat is not warm enough	• Check if its temperature is set at 'Off' or 'Low'
Enema Wash is not operated	• Check if it is set at CHILD mode.

Self-Diagnosis Table

※ When any abnormal phenomenon occurs, please refer to the following table, and inform the exact status at the time of requesting A/S service. It may relieve our countermeasure.

No	Self-Diagnosis Phenomenon	Way of Indication
1	Pump motor disconnected or not inserted	WASH, BIDET, ENEMA WASH are our of operation
2	Pump motor short-circuited	
3	Deodorizing motor: Check the cycle of rotation at low speed	Buzzer sounds. Abnormal condition is differently indicated by symptoms
4	Stoppage of motor due to the over-current of deodorization motor	
5	Heat stops in case of low speed rotation of drying motor	
6	Heater and drying motor simultaneously stop in case of the over-current of drying motor.	

11. Product Specifications

Item			EB-R500
Rated Voltage			AC 240V,50Hz
Max. Consumption Power			1670W
Power Cord Length			1.8M
Water Feed Method			Directly Connected to Water Pipe
Water Pressure			0.7~7.5kgf/cm²
Wash	Feeding Volume	Wash	0.7ℓ/min
		Bidet	0.7ℓ/min
		Enema Wash	0.7ℓ/min
	Water Pressure Control		5-Step Control
	Temp. Control		Room Temp. ~ 38℃
	Heater Capa.		1600W
	Safety Device		Temp. Fuse, Thermo Switch
Heated Seat	Temp. Control		Room Temp. ~ 42℃
	Heater Capa.		55W
	Safety Device		Temp. Fuse
Dry	Temp. Control		Room Temp. ~ 50℃
	Heater Capa.		250W
	Safety Device		Temp. Fuse, Bi-metal
Deodorization			Catalytic Deodorization
Product Dimension		Elongated	406mm X 528mm X 145mm
		Regular	406mm X 498mm X 145mm
Product Weight		Elongated	4.7kg (gross packed weight 7.7kg)
		Regular	4.5kg (gross packed weight 7.5kg)

WMTS 051
20094

E5780

JAS-ANZ

ABCB

IPX4

WARNING: THIS TOILET DOUCHE SEAT MUST BE INSTALLED WITH APPROPRIATE BACKFLOW PROTECTION CONFORMING TO THE NATIONAL CONSTRUCTION CODE - VOLUME THREE AND THE PCA.

12.Comparison Chart

	Division	EB-S500
Wash/Dry Function	Wash	●
	Bidet	●
	Enema Wash	●
	Dry	●
	Deodorization	●
	Bubble Wash	●
	Continuous Warm Water Supply	●
Convenient /Comfort Function	Automatic Energy Saving	●
	Learning Energy Saving	●
	Move	●
	Pulse	●
	Remote control unit	●
	Warm Seat	●
	Soft Lid	●
	Detachable Main Body	●
	Child	●

11.Comparison Chart

■ **Dimension diagrams**

Elongated type seat

Sizes in (mm)



Regular type seat

Sizes in (mm)

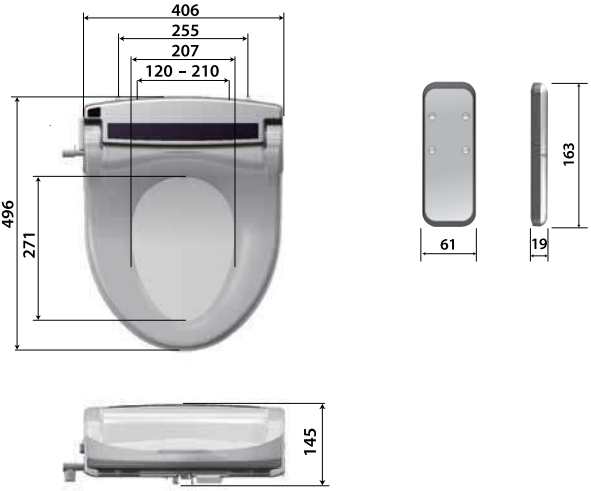

2 Seat Sizes

.Memo

13. Warranty Information

2 YEAR WARRANTY PARTS & LABOUR

1. We hereby warrant that the Product will be free from manufacturing defects which affect the ability of the Product to operate for its intended use.
2. In case of failure immediately cease using the Product. Go to ecobidet.com/support and view the troubleshooting guide, if this does not solve the problem contact customer support.
3. Warranty is for product only and does not include deinstallation/installation or shipping.
4. For comprehensive warranty information go to ecobidet.com/support.

Please complete form for your own records

Product Name			
Model Name			
Date Purchased			
SER. No.			
Customer's Address		Name	
		Tel.No	
Distributor's Address		Name	
		Tel.No.	

Our goods come with guarantees that cannot be excluded under the Australian Consumer Law. You are entitled to a replacement or refund for a major failure and for compensation for any other reasonably foreseeable loss or damage. You are also entitled to have the goods repaired or replaced if the goods fail to be of acceptable quality and the failure does not amount to a major failure.

Please choose carefully we do not normally give refunds if you simply change your mind or you have measured incorrectly or for health reasons if the bidet has been used.

We will refund, exchange or credit if the goods are faulty and cannot be repaired.

Please retain your invoice for the period of your warranty.
Any returns may incur up to 20% restocking fee and/or shipping costs.

See Consumer Laws in relation to change of mind
(AUST) www.consumerlaw.gov.au (NZ) www.consumerprotection.govt.nz
In case of product failure

ECO BIDET®

AUSTRALIA : 1201/56 Scarbourough St, Southport, 4215 QLD
New Zealand : Unit 5/31 Princes St, Onehunga 1061
PH: +61 2 8039 3136
www.ecobidet.com/support

Please Scan for

Installation Videos,
User Guides,
Warranty Information
& Customer Support.

WMTS 051
20094

E5780

JAS-ANZ

ABCB

IPX4

WARNING: THIS TOILET DOUCHE SEAT MUST BE INSTALLED WITH APPROPRIATE BACKFLOW PROTECTION CONFORMING TO THE NATIONAL CONSTRUCTION CODE - VOLUME THREE AND THE PCA.

CUSTOMER SUPPORT HOTLINE:

AUSTRALIA

02 8039 4519

NEW ZEALAND

09 320 3585

Made in Korea

Manufactured for InteliCorp P/L. All Rights Reserved.