

The **Air Series 9000** includes an Integral High Hazard Backflow Prevention Device (25mm Air Gap) Complying with AS/NZS 2845.2 and the Plumbing Code.

CONTENTS

Important Safeguard / General Cautions ---- 3

Identification / Accessories ---- 5

General Information ---- 6

Installation of Unit ---- 7

Deodoriser installation ---- 10

Installation of Remote Control ---- 11

Preparation / Operation / Symbols of Remote Control ---- 12

Side Control Panel ---- 13

Operation of Remote Control ---- 14

Maintenance ---- 17

Troubleshooting ---- 19

Size Information ---- 20

Specifications & Approvals ---- 21

Warranty ---- 22

Important Safeguards / General Cautions

Read all instructions before installation and use
The following terms are used in this manual to indicate hazards of varying degrees of severity

DANGER	Indicates an imminently hazardous situation, if not avoided, will result serious injury.
WARNING	Indicates potentially hazardous situation which, if not avoided, will result serious injury.
CAUTION	Indicates potentially hazardous situation which, if not avoided, will result in minor or moderate injury or in damage to the product or other property.

PLEASE OBSERVE THE FOLLOWING PRECAUTIONS BEFORE USING InteliClean Air Series® digital bidet

Do not open the product to repair or remodel.
Only qualified service personnel should service the InteliClean Air Series® digital bidet.
Do not use attachments not recommended by the manufacturer.

Connect the InteliClean Air Series® digital bidet to cold water supply pipe carrying potable water.
Do not use rain water or surface water.

Do not plug in the power cord before connecting the water supply hose.

The InteliClean Air Series® digital bidet must be grounded.
An approved circuit breaker must be used.

Never operate this product if it has a damaged cord or plug. InteliClean Air Series® digital bidet must be connected to a standard GPO 240 voltage power source.
Do not connect the power cord if the cord is damaged or broken.
Do not plug the unit into a loose electric outlet.

Keep the electrical cord away form heated surfaces to prevent a fire hazard. Also, keep any flammable materials away at all times from the InteliClean Air Series® digital bidet.

Do not touch the power cord with wet hands.

Do not splash water on the unit. Do not install in a location exposed to excessive moisture in that condensation would form on the unit surface. To avoid damage to electronic components due to high level of humidity, it is necessary to provide adequate ventilation with a fan, open door or open window when bathing.

The supervision of children, some elderly people or persons that have other limitations in body movement, illness or disabilities is necessary for the safety and full benefit of the InteliClean Air Series® digital bidet.

The InteliClean Air Series® digital bidet has been designed to use for cleansing the anal area and, with the Lady shower, the vaginal area. Its use for any other purpose is deemed improper. InteliClean accepts no liability for any consequences of improper use.

CAUTION

Never operate this product if it is not working properly, if it has been dropped or damaged, or dropped into water. Return the product to a service center for examination and repair.

Do not obstruct or put anything into the dry air outlet. Do not apply excessive force to the shower nozzle.

Do not stand on the seat cover.

Do not bang the seat and lid.

Do not strain or push the connected hose and tube connecter; it may cause water leakage. Never drop or insert any object into any opening or hose.

If the seat is loose, tighten the bolts.

Do not place a radiant header too close to the InteliClean Air Series® digital bidet, the heat may cause a change of colour or distortion.
This might happen with direct bright sunshine as well.

Do not use hair spray, aerosols or any other beauty products (like nail polish) near by the digital bidet. The surface could be damaged.

SAVE THESE INSTRUCTIONS

1. If the supply cord is damaged, it must be replaced by the manufacturer, its service agent or electrician in order to avoid a hazard.

IDENTIFICATION

1. Lid
2. Control panel (left)
3. Deodorizer
4. Heated seat
5. LED indicator (Power, Economy)
6. Dryer outlet
7. Nozzle cover
8. Nozzle with nozzle tip
9. Occupied digital sensor
10. Water draining button
11. Control panel (right)
12. Release button

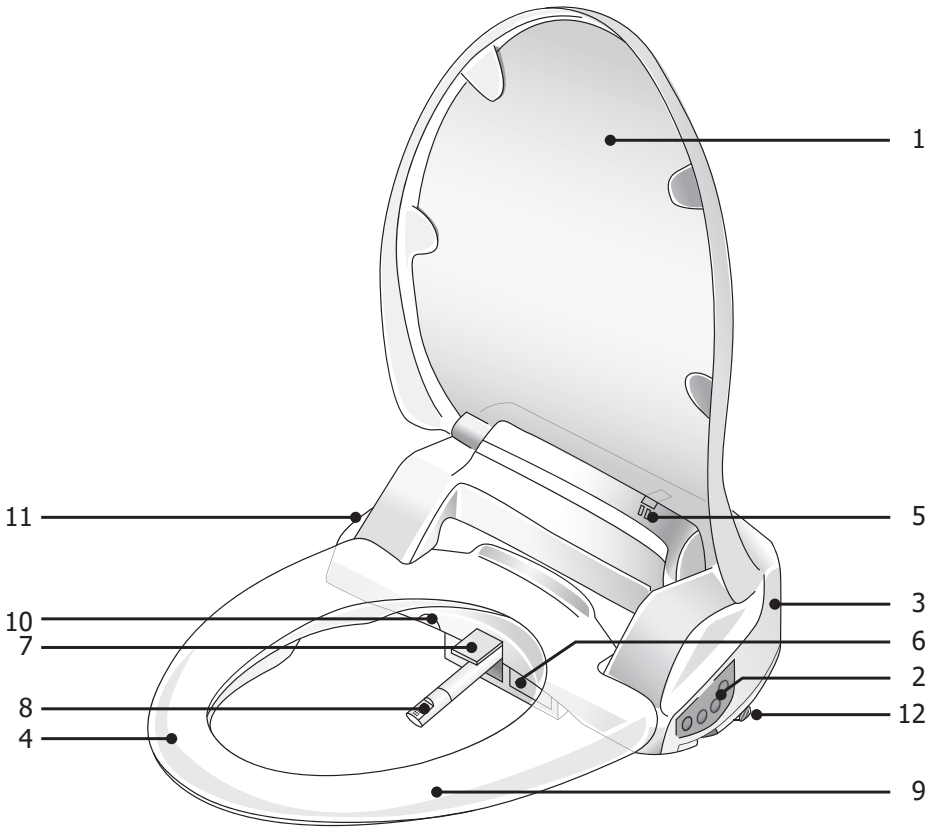

Top Fixing Bolts

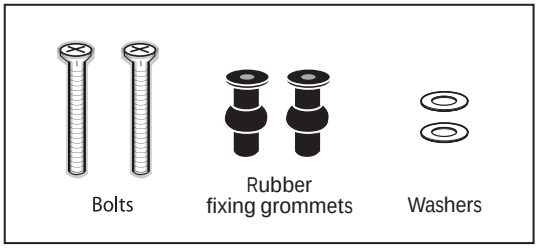

Bottom Fixing Bolts

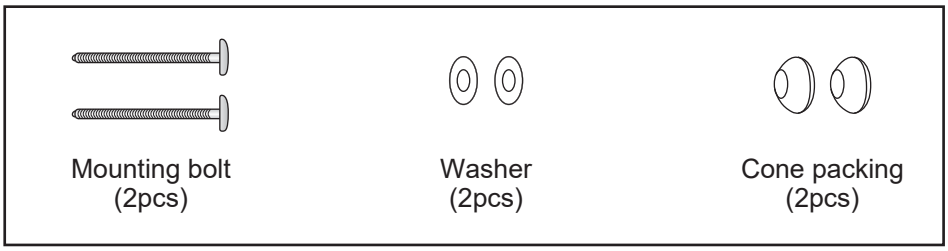


Nozzle tip


Dual check

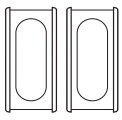
Bracket holder
(2pcs)


Deodorizing case
(1pcs)


Deodorizing filter
(1pcs)

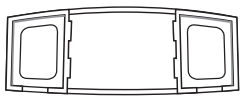
Bracket (1pcs)


Water hose
(1pcs)

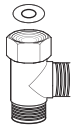
T-valve &
washer (1pcs)


Spare nut
(1/2”→3/8”, 1pcs)


Spare nut
(3/8”→1/2”, 1pcs)

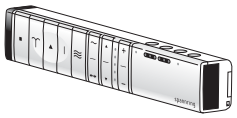
Remote
control (1pcs)

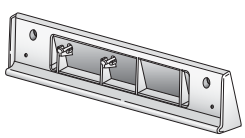
Remote control
bracket (1pcs)


AA battery
(2pcs)


String
(1pcs)


Instruction
manual (1pcs)

GENERAL INFORMATION

This user manual is for all InteliClean Air Series® digital bidet models.

When using the InteliClean digital bidet for **the first time**, you will find the following settings

Factory setting:
- Seat temperature : 1st level
- Water temperature : 2nd level
- Water pressure : 2nd level
- Nozzle position : 2nd level
- Oscillation : yes (not available for intensive shower)
- Dryer : 2nd level
- Pulsation : no
- Deodorizer : no

The unit will memorize the last settings
(for every function, after every use).

Soft close
To prevent the toilet seat and lid from being lowered forcefully,
a damping mechanism is provided to lower them gradually.
Do not close seat or lid roughly or too forcefully as this may damage or break the seat and or lid.

LED´s in the housing
There are two LED´s on top of the housing.
The left one should be “green” and shows that the power is “on”.
If it is not “green” than the unit has no power.
The right one is “yellow” if the energy saving mode is on.
This LED also is “blinking” when you are programming the deodorizer.

INSTALLATION

Caution before first installation
Connect the unit only to a cold water (drinking water) supply.
Never use rainwater.
You need a power socket 240V and 50Hz.
Do not plug in before you open the water supply.

Note : Steps may vary by type of toilet bowl

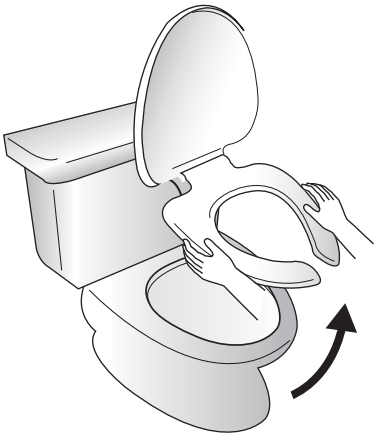

Removing the existing toilet seat and cover.
Store the removed seat, cover and screws in a safe place in case of re-installation

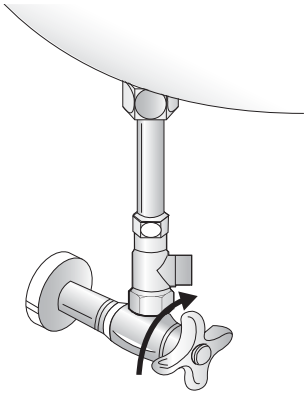

Shut off water to toilet by closing the water feed valve.
Flush the toilet to drain the toilet tank.

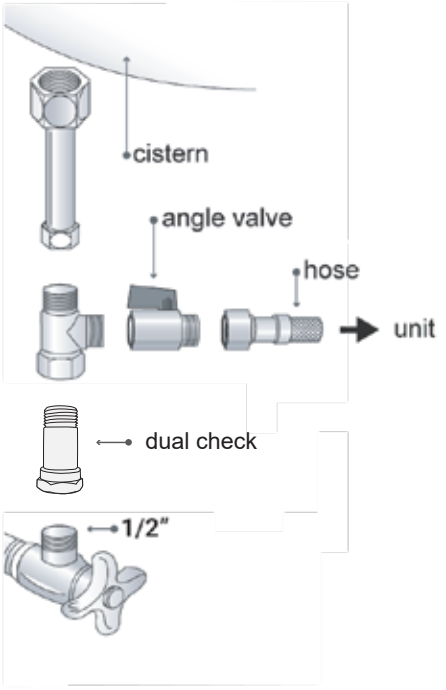

Install the t-valve between the water supply line and the toilet tank. So you have two possibilities to close the water in case of repair or removal. And the toilet flush is working in every case.

Note : Use spanner to tighten all connections before continuing.
Angle valve is not a part of accessories.



Bottom Fixing Option

1. Put the 2 bolts into the 2 bracket holders.
2. Place this bolt assembly into the bracket holder as shown.
3. Guide arrow on the bracket should face up and towards the toilet tank.
4. Place the bracket and insert the bolt assembly on the toilet bowl.

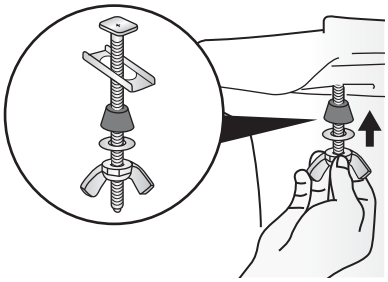

Bolt and Nut Assembly for Bottom Fix

1. Fit the cone packing and plastic washer onto the bolt from below the toilet bowl as shown.
2. Loosely tighten nut by hand.

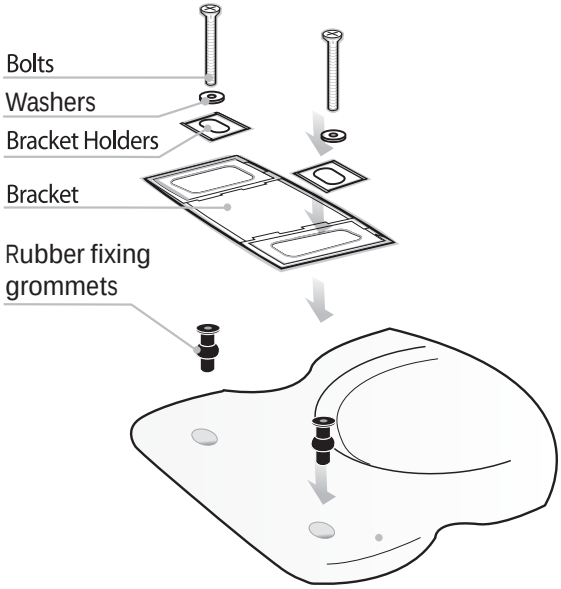

Top Fixing Option

If 'Top Fixing Bolts' are required then fix the bracket onto the toilet first with these.

Install top fixing kit so can bracket can move.

Position the seat correctly before final tightening of the bolts.

Lorem ipsum

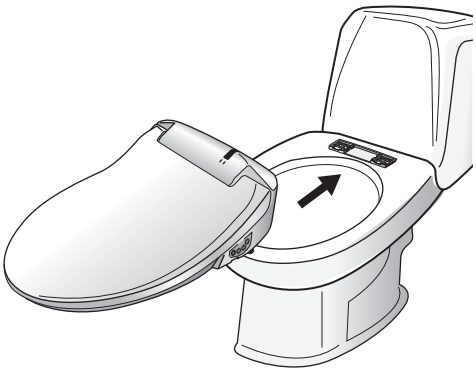

InteliClean Air Series® digital bidet Assembly

1. Slide the unit onto the bracket centering the unit with the guide arrow on the bracket.
2. Slide the unit onto the bracket completely until it sounds "clock".
3. When it is not installed well, it may cause damage.
4. The unit will feel a little loose on the toilet bowl. Adjust the fit from front to back and side to side for balance.
5. Tighten the nuts on both bolts securely.

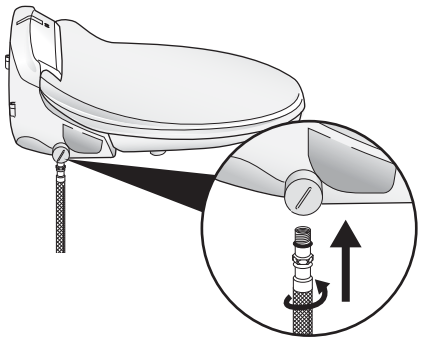

Connection the bidet hose to the unit

The screen filter is already inside of the silver connection part.

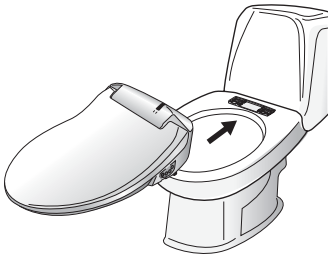

If the protection A interrupts to slide the unit backward completely, cut the protection A along the guideline.

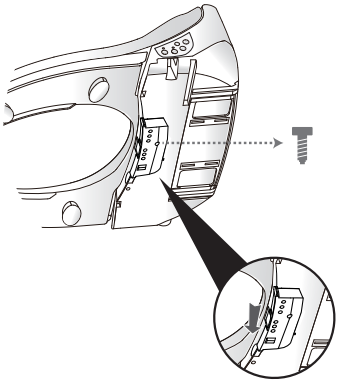

1. Unscrew first
2. Take the protection A away gently. Be careful of not breaking hook parts.
3. Cut both sides of protection A

*Carefully using a cutter.

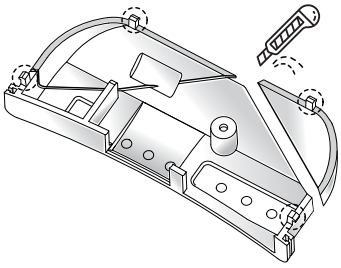

Hook part

Guideline

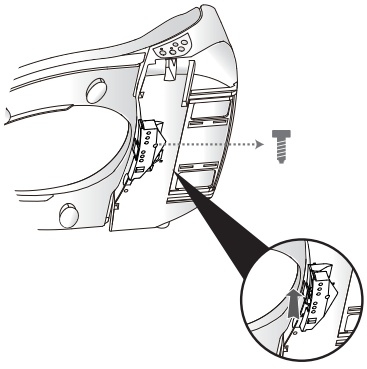

4. Hook the protection A back on the bottom of the unit.
5. Screw to fix.

Now the bidet seat can be sild further backward.

Before

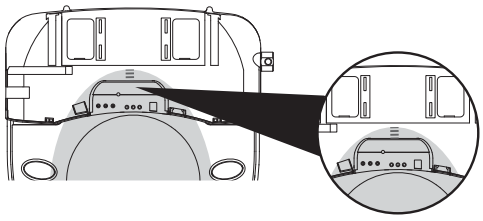

After

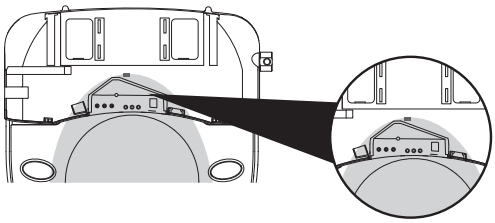

DEODORIZER INSTALLATION

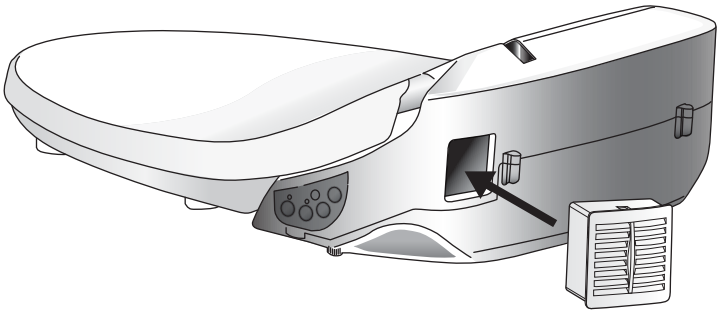

Deodorizer Installation
Insert the deodorant cartridge into the unit.
Here you can also change the deodorant case

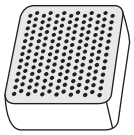

Deodorizing filter



Deodorizing case

First activating/using of the unit
- Open the water supply
- Plug in
- Water tank will be filled up automatically (please wait until beeping)
- Simultaneously green LED on the unit turns on.

INSTALLATION OF REMOTE CONTROL

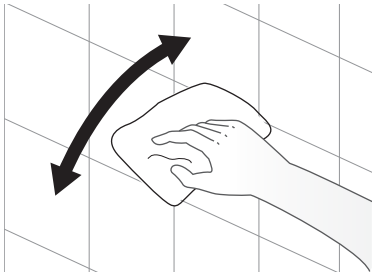

Clean the place thoroughly
to attach the bracket.

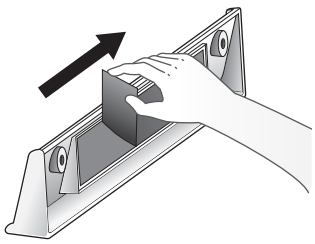

Remove the adhesive
protection to attach
the remote control bracket.

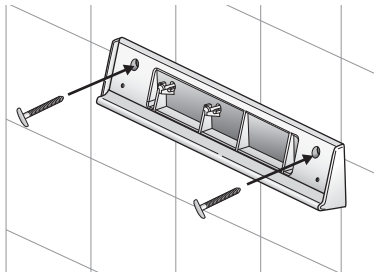

Depending on wall type,
you can install the screw
directly or use the anchor
mounts as shown.

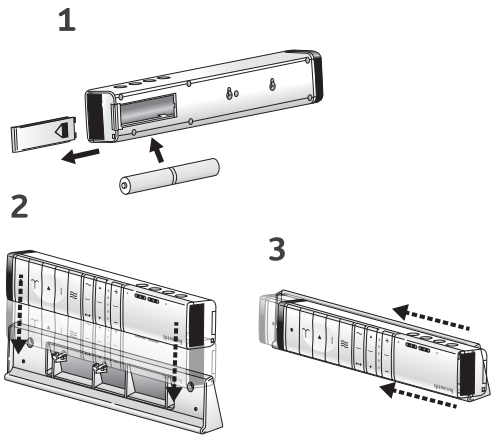

Take off the battery cover and
place supplied batteries with
correct direction.
Close the battery cover.
Hook the remote control on the
bracket and gently slide it to
left to fix it completely.

Note : Failure to install the batteries
properly could cause damage
or failure of the remote control unit.

Failure of installation could cause
the remote control falling down.



The remote control can be
hanging on the hanger
if you prefer to not to drill holes
into the wall and not to adhere
the bracket to the wall.

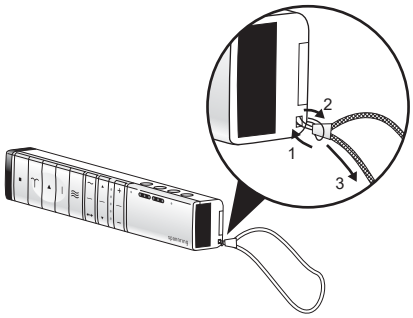

Refer to the photo to
assemble the string.

PREPARATION

- Open the water supply shut off valve and check for any water leaks
- Plug the InteliClean Air Series® digital bidet into the proper power source
- The water tank will be filled automatically right after plug in.
  When the water tank is filled, “CHIME” will sound.

OPERATION
SIT DOWN ON THE SEAT in central position to activate the sensor

- After an extended wash, allow about one minute for water to reheat.

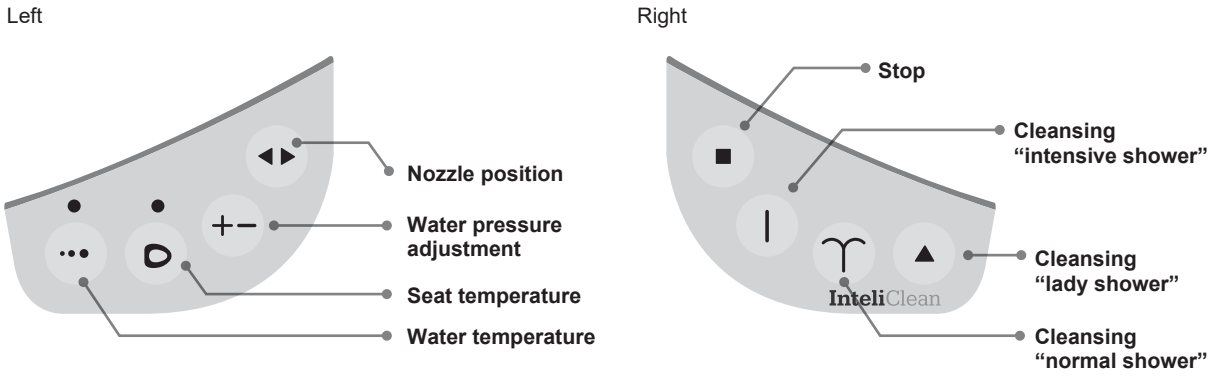

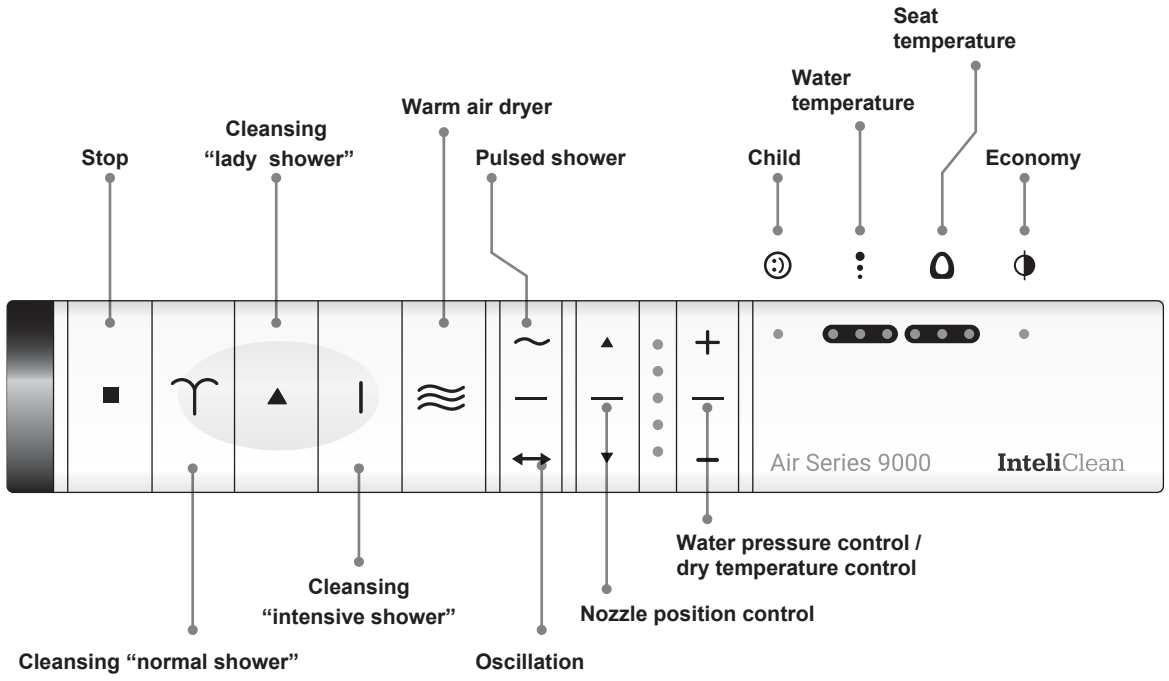

SIDE CONTROL PANEL

Right

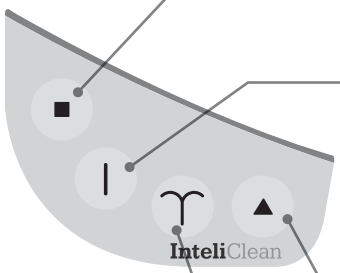

Stop
Press this button to stop in middle of any operation.
Getting up from the toilet stops the operation as well.
Press this button for more than 3 seconds to turn off the power.

Cleansing “intensive shower”
Press “intensive shower”. Automatically the water nozzle comes out and sprays warm stream of water to the center of the anus (rectum). Use the “normal shower” and “Dry” function to finish the cleansing. It operates one minute and stops automatically.

Cleansing “lady shower”
Press “lady shower”. Automatically the water nozzle comes out and sprays warm, water to feminine area. It operates one minute and stops automatically.

Cleansing “normal shower”
Press “normal shower”. Automatically the water nozzle comes out and sprays warm, water to posterior. It operates one minute and stops automatically.

Oscillation
When “normal shower” or “feminine shower” button is pressed, oscillation shower (nozzle moves back and forth repeatedly) will work automatically for wider cleansing. (This function will not work during the intensive shower) Press the same shower button again to stop the oscillation shower.

Left

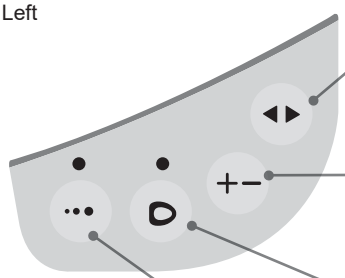

Nozzle position
adjustable in five levels.

Water pressure adjustment
adjustable in five levels.

Seat temperature
adjustable in four levels : room temperature, 34°C, 38°C, 42°C.

Water temperature
adjustable in four levels : room temperature, 33°C, 36°C, 39°C.

Note : If necessary, adjust position of water stream with< or >, and the water pressure with + or -.
Note : After sitting down on the unit, the initial water temperature, seat temperature, dryer temperature and nozzle position will be set at latest used level.

REMOTE CONTROL



Stop
Press this button to stop in middle of any operation.
Getting up from the toilet stops the operation as well.



Cleansing “normal shower”
Press “normal shower”. Automatically the water nozzle comes out and sprays warm water to posterior. It operates one minute and stops automatically.



Cleansing “lady shower”
Press “lady shower”. Automatically the water nozzle comes out and sprays warm water to feminine area. It operates one minute and stops automatically.



Cleansing “intensive shower”
Press “intensive shower”. Automatically the water nozzle comes out and sprays warm stream of water to the center of the anus (rectum). Use the “normal shower” and “Dry” function to finish the cleansing. It operates one minute and stops automatically. This shower will not work if child mode is activated.



Warm air dryer
Press this button and dry air is gently directed to washed area for 3 minutes.
Warm air temperature can be adjusted by pressing “+” or “-” button.
Can be adjusted to 5 separate levels.

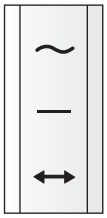

Pulsed shower
When using “normal shower”, “lady shower” or “intensive shower”, pressing this button will provide a pulsation spray.
Press this button again to stop the pulsed shower.

Oscillation
When “normal shower” or “lady shower” button is pressed, oscillation shower (nozzle moves back and forth repeatedly) will work automatically for wider cleansing. (This function will not work during the intensive shower)
Press the same shower button again to stop the oscillation shower.
Oscillation also can be controlled by oscillation button on the remote control.

Note : The function “Pulsated shower” and “Oscillation” can be used at the same time.
Note : If necessary, adjust position of water stream with< or >, and the water pressure with + or -.

REMOTE CONTROL

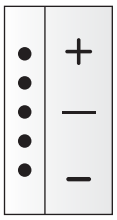

Water pressure adjustment
adjustable in five levels.

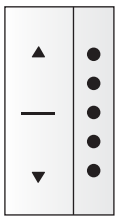

Nozzle position
Adjustable in five levels.



Seat temperature
adjustable in four levels: room temperature, 34°C, 38°C, 42°C.



Water temperature
adjustable in four levels: room temperature, 33°C, 36°C, 39°C.



Child function
Press this button to activate the child function and use other functions as usual.
- the nozzle extracts little more than usual
- water temperature and seat temperature will be set lower than usual
- water pressure will be set less powerful than usual

Press this button again to release this function.
During Child function activating, “intensive shower” will not work.
Child mode will be released automatically in 15 minutes.

Note : After sitting down on the unit, the initial water temperature, seat temperature, dryer temperature and nozzle position will be set at latest used level.

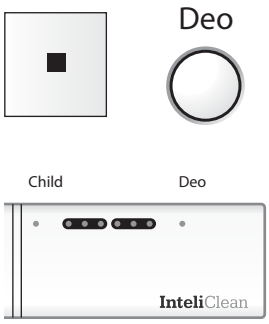

Deodorizer

The deodorizer fan can be activated by pressing Stop and Power saving button on the remote control for more than 3 seconds. Deodorizing LED will be changed repeatedly if you keep pressing both buttons to change the fan speed.

- Child LED blinking + Economy LED OFF : Fan does not work
- Child LED blinking + Economy LED blinking : 50% fan speed
- Child LED blinking + Economy LED ON : 100% fan speed

After user leaves the seat, the fan will stop in 1 minute.

Note : The deodorizing function will not work until it is activated by users.

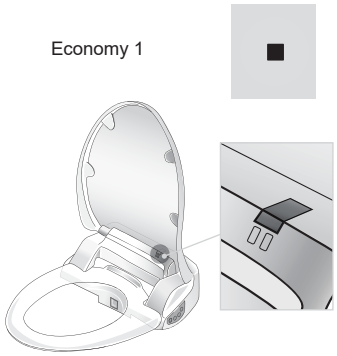

Economy – Power Save Mode

Economy 1 (holiday energy saving) - Off

- This energy saving mode turns the power off.
- Power off : Press Stop button on the side control for 3 seconds. The unit will memorize the last settings.
- Power on : Press stop button



Economy 2 - Yellow

- The energy saving feature drops the seat temperature to about 32C and sets the water temperature as no heating when seat is not in use. This mode will be released if seat is occupied and temperature settings will be changed to previous settings. After leaving the seat, this mode will be reactivated automatically.

MAINTENANCE

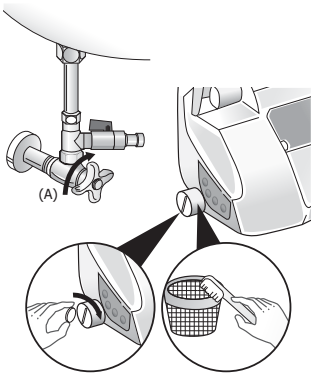

CLEANING THE STRAINER

The unit will not operate properly if the strainer is clogged.
Please clean the strainer regularly.

1. Close the water shut off valve (A)
2. Flush the toilet to empty the water reservoir
3. Use a coin to remove the strainer cap
4. Clean the screen filter with a small brush or water
5. Re-screw the water filter nut
6. Open the water shut off valve (A)

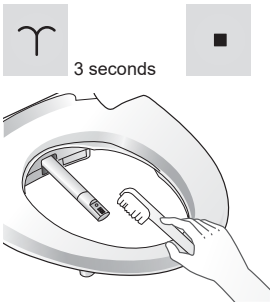

CLEANING THE NOZZLE

When the “normal shower” button on the side control button is pressed for 3 seconds without sitting on the seat, the nozzle will extract without spraying and can be cleaned with a soft toothbrush. After cleaning the nozzle, push “Stop” button on the side control panel and the nozzle retracts itself.

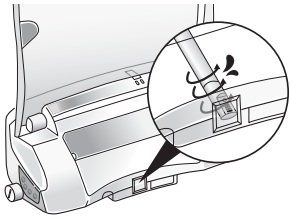

SELF CLEANING NOZZLE

Before and after each use, nozzle will be automatically cleaned by fresh water rinsing off.

CLEANING/DESCALING NOZZLE TIP AND CHANGING

With lime-containing water, limescale in the shower nozzle easily settles and reduces showering power. The nozzle tip can be removed / exchanged for cleaning / descaling as follows:

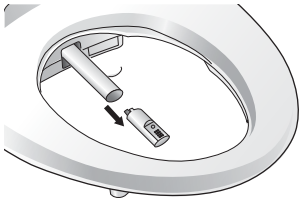

- Open cover and seat
- Press the “normal shower” button on the side control panel for 3 sec
- The nozzle extracts without spraying
- Fix the shower arm with one hand, with the other hand pull the shower nozzle off. Please make sure that the sealing o-rings do not fall into the toilet.
- Clean/descale the nozzle tip with commercially available descaling agents
- For attaching the nozzle tip please use a little Vaseline
- Then press the “stop button” on the side control panel

Malfunction caused by lime is not covered by the warranty.



CLEANING THE BODY OF UNIT

When you clean the unit, do not use “thinner”, “benzene” or toilet bowl cleaner. It may cause damage to the surface of unit. Use a wet cloth. Do not spray water directly on to the unit. When you clean the unit, disconnect the power plug.

Use only liquids for cleaning the unit.

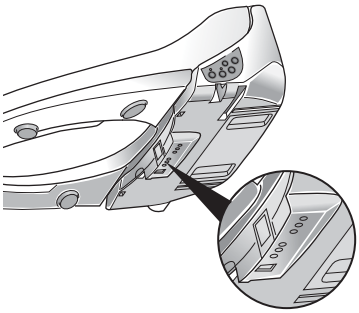

PROTECTION FROM DIRT

This unit is specially designed to protect nozzle and dryer's under parts from dirt. Cover can be removed to allow bidet to fit on smaller bowls.

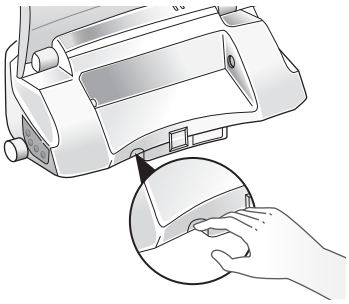

WATER DRAINING

If you do not intend to use the unit for 14 days or longer, in case of moving or major cleaning, drain the water from the water tank. Disconnect the power plug from the outlet and close the water feed valve. Press the drain button as it is shown in the photo until the water is completely drained.
To re-supply water after draining, open the water shut off valve.

Note: Do not turn upside down. Do not drink the drained water.

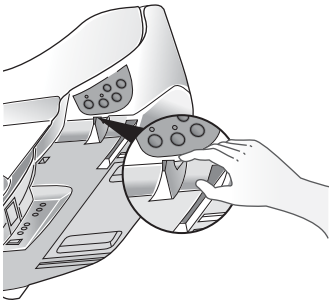

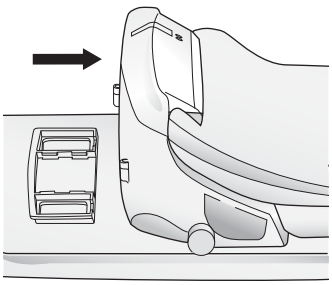

SEPARATION FROM THE TOILET BOWL

Push the button on the right side of the unit to release the unit.
In case of moving house or extensive cleaning, disconnected the power plug first and separate the unit.

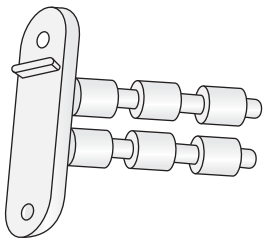

EM ceramic pipes

6 EM ceramic pipes in the water tank make activating the water.

TROUBLESHOOTING

Trouble	Cause	Remedy
• The water does not spray	• The water tank is not filled. • The units stopped after one minute continuous operation • The shutoff valve is closed • The screen filter is blocked	• Wait about one minute. • Press the cleaning button once again • Open the shut off valve • Clean the screen filter
• The water is not warm enough	• The water temperature is set to low • Continuous operation has depleted the supply of warm water • The energy saving modus is activated • Child mode is activating.	• Set the water temperature to high. In 3 minutes you will have the desired temperature • Wait about 3 minutes • Deactivate this function (remote control) • Release the child mode.
• Intensive shower is not working	• Normal and lady shower are working, but intensive shower is not working.	• Release the child function by pressing the Child button. (remote control)
• The water pressure is too weak	• The water pressure level is set to low • The nozzle tip is blocked by limescale • The child function is activated	• Set the water pressure to high • Clean the nozzle tip • Deactivate this function (remote control)
• The unit is not operating	• Disconnected power cord • The seat is not occupied. • The unit is switched off with the stop-button • The batteries of remote control is exhausted	• Connect the power cord. Check the power supply system in your house • Occupy the seat • Push the stop-button till it 'beep' • Replace the batteries
• Water is leaking (after self-cleaning of the nozzle)	• Check the water supply system	• If water is leaking from the main unit, call the place you purchased the unit
• The unit makes a noise when not in operation	• Deodorizer is working automatically • Water is heating	• Deodorizer is working 2 minutes more after finishing the other functions • Accept it or turn the water temperature to "off"

Defects caused by hard water (lime scale) are not covered by warranty.

SIZE INFORMATION

InteliClean Air Series ® digital bidet seat
9000R (Round)

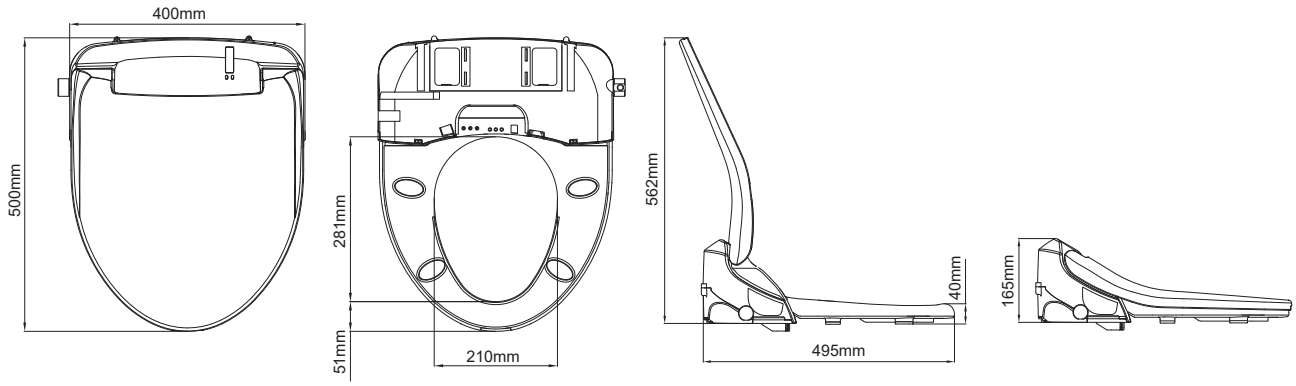

InteliClean Air Series ® digital bidet seat
9000E (Elongated)

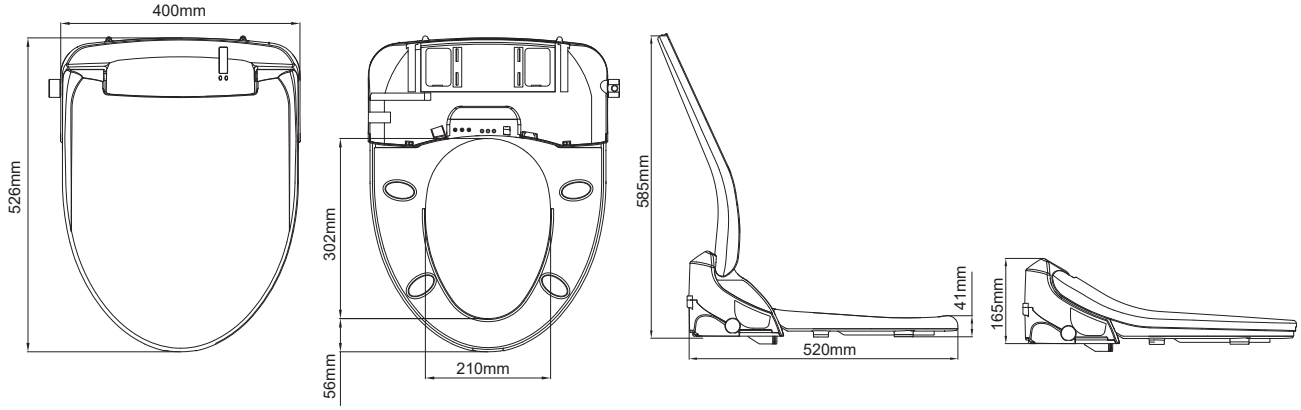

Remote control for InteliClean Air Series ® digital bidet seat
9000

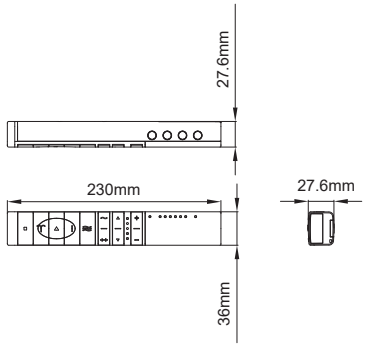

SPECIFICATIONS

InteliClean Air Series® digital bidet

Power Rating	AC 230 V / 50/60 Hz / 1470 W
Water Inlet pressure	0.68 ~ 7.35 bar
Power Cord	1.8m or 0.47m
Wash Device	Direct connection to the water supply tubes: - 1 water supply pipe 740mm length. Dimension M10(M) - 1 t-valve 3/8" inside and 2x outside - spare nut 1 1/2"(F) to 3/8"(M) - spare nut 2 1/2"(M) to 3/8"(F)
Wash volume	0.5 ~ 1.0 Litre /min
Water temperature	39 ± 2°C, four levels adjustable
Warm air dryer	250 W, five levels adjustable
Heated seat	55 W, four levels adjustable
Deodorizer	Catalyst
Dimension	9000R: L 500 mm , W 400 mm, H 165 mm 9000E: L 526 mm , W 400 mm, H 165 mm
Color	White
Water proof	IPX4
Material of plastic	ASA
Weight	8.5kgs
Weight limit	160kgs
Remote control	infrared, battery 2 x: LR 6, 1,5V, size AA
Approval	CE, GS, DVGW W540 (EN1717,EN13077,KTW,W270)

The Air Series 9000 digital bidet can be placed on nearly any ceramic.

Note:
this device can be used by children 8 years and older.
the manufacturer reserves the right to make changes.

WARNING: THIS TOILET DOUCHE SEAT MUST BE INSTALLED WITH APPROPRIATE BACKFLOW PROTECTION CONFORMING TO THE NATIONAL CONSTRUCTION CODE - VOLUME THREE AND THE PCA.

The **Air Series 9000** includes an Integral High Hazard Backflow Prevention Device (25mm Air Gap) Complying with AS/NZS 2845.2 and the Plumbing Code of Australia (PCA).

IPX4
Waterproof

WMTS 051
20094

E5780

JAS-ANZ

ABCB

InteliClean

Intelligent Hygiene Systems

3 YEAR WARRANTY PARTS & LABOUR

1. We hereby warrant that the Product will be free from manufacturing defects which affect the ability of the Product to operate for its intended use.
2. In case of failure immediately cease using the Product.
   Go to **intelicorp.com.au/product-guide-inteliclean-air-9000s/**
   to view the troubleshooting guide, if this does not solve the problem contact customer support.
3. Warranty is for product only and does not include deinstallation/installation or shipping.
4. For comprehensive warranty information go to **thebidetshop.com.au/pages/warranty**

Please complete form for your own records

Product Name			
Model Name			
Date Purchased			
SER. No.			
Customer's Address		Name	
		Tel.No	
Distributor's Address		Name	
		Tel.No.	

Our goods come with guarantees that cannot be excluded under the Australian Consumer Law. You are entitled to a replacement or refund for a major failure and for compensation for any other reasonably foreseeable loss or damage. You are also entitled to have the goods repaired or replaced if the goods fail to be of acceptable quality and the failure does not amount to a major failure.

Please choose carefully we do not normally give refunds if you simply change your mind or you have measured incorrectly or for health reasons if the bidet has been used.

We will refund, exchange or credit if the goods are faulty and cannot be repaired.

Please retain your invoice for the period of your warranty.
Any returns may incur up to 20% restocking fee and/or shipping costs.

See Consumer Laws in relation to change of mind
(AUST) www.consumerlaw.gov.au (NZ) www.consumerprotection.govt.nz

In case of product failure

InteliClean
Air Series
9000

AUSTRALIA : 1201/56 Scarbourough St Southport 4215 QLD
PH: +61 7 5591 7744
New Zealand : Unit 5/31 Princes St, Onehunga 1061
PH: +64 9 320 3560

InteliClean

Intelligent Hygiene Systems

Please Scan for

Installation Videos,
User Guides,
Warranty Information
& Customer Support.

WMTS 051
20094

E5780

JAS-ANZ

ABCB

IPX4

WARNING: THIS TOILET DOUCHE SEAT MUST BE INSTALLED WITH APPROPRIATE BACKFLOW PROTECTION CONFORMING TO THE NATIONAL CONSTRUCTION CODE - VOLUME THREE AND THE PCA.

CUSTOMER SUPPORT HOTLINE:

AUSTRALIA
02 8039 4519

NEW ZEALAND
09 320 3585

Made in Korea
Manufactured for InteliCorp P/L. All Rights Reserved.



For additional information, installation videos and additional resources please go to the website

inteliclean.co.nz | inteliclean.com.au