INSTALLATION GUIDE

InteliClean Air 9000S

Electric bidet seat · Step-by-step installation

Read all steps before starting. Steps may vary slightly by type of toilet bowl.

Before you begin

01
Cold drinking water
Connect only to a cold (drinking) water supply. Never use rainwater.

02
Power socket
A 240V, 50Hz power socket is required near the toilet.

03
Water before power
Do not plug in until the water supply has been opened.

04
Licensed plumber
All products must be installed by a licensed plumber.

Product overview

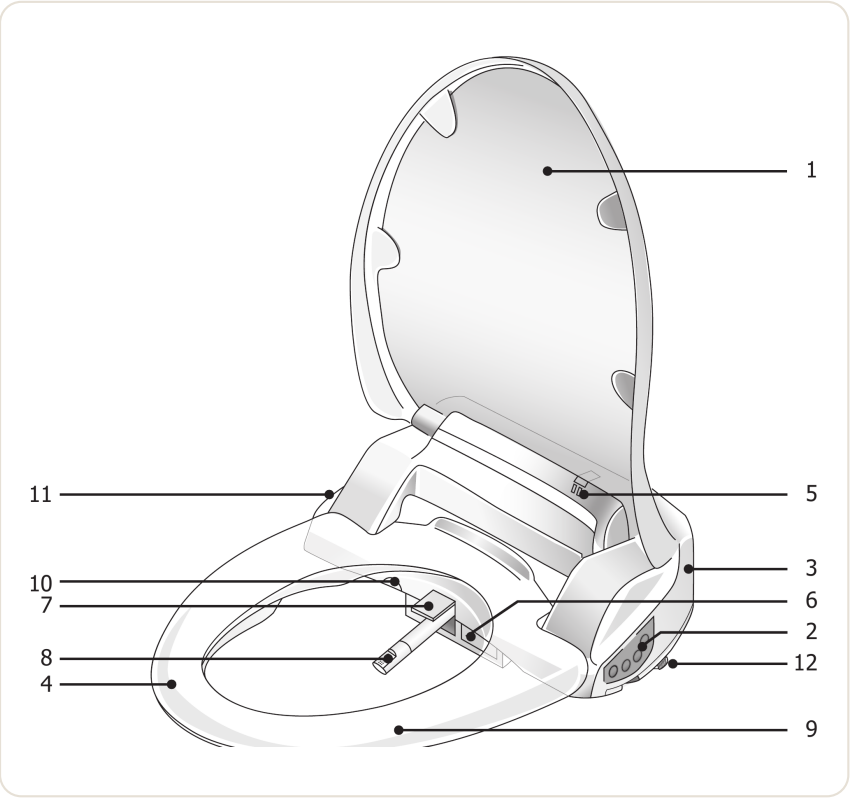

1. Lid
2. Control panel (left)
3. Deodoriser
4. Heated seat
5. LED indicator (power, economy)
6. Dryer outlet
7. Nozzle cover
8. Nozzle with nozzle tip
9. Occupied digital sensor
10. Water draining button
11. Control panel (right)
12. Release button

What's in the box

Lay out and check every part before you start

MOUNTING

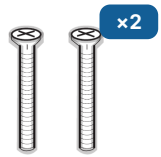

Bolts

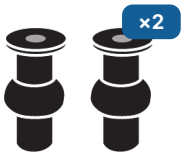

Rubber fixing grommets

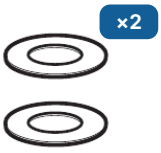

Washers

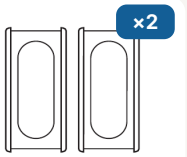

Bracket holders

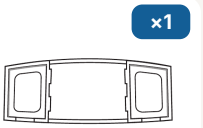

Bracket

WATER CONNECTION

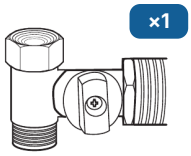

T-valve & washer

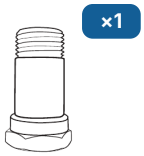

Dual check valve

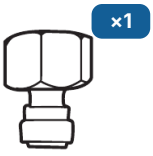

Reducer (½″ → ¼″)

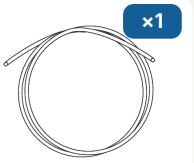

Water hose

SEAT & DEODORISER



Nozzle tip

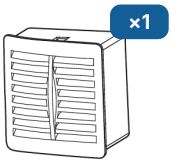

Deodorising case

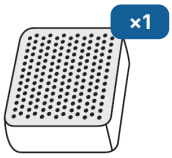

Deodorising filter

REMOTE CONTROL



Remote control

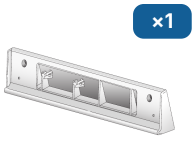

Remote control bracket

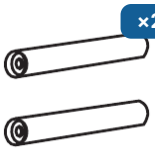

AA batteries

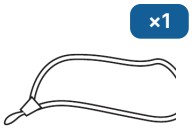

String

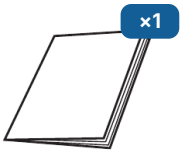

Instruction manual

Not supplied: the angle valve (wall tap). A spanner is needed to tighten all water connections.

Installation

Steps 1 – 4 · Prepare the toilet, connect the water and fit the bracket

1

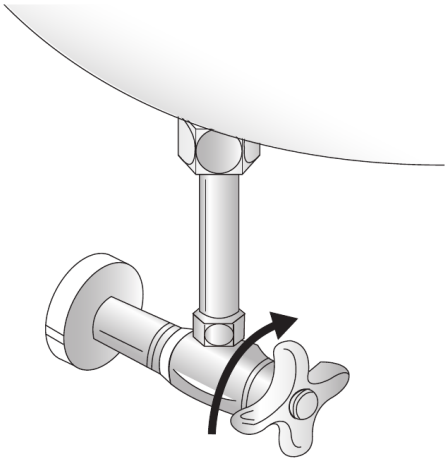

PREPARATION

Turn off the water

Close the water feed valve to shut off the water to the toilet, then flush to drain the cistern.

2

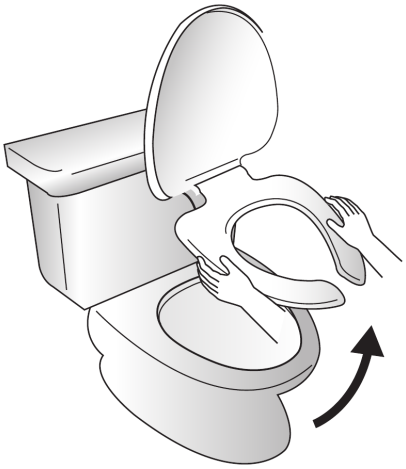

PREPARATION

Remove the existing seat

Remove the existing toilet seat and lid. Keep the seat, lid and screws somewhere safe in case you need to reinstall them.

3

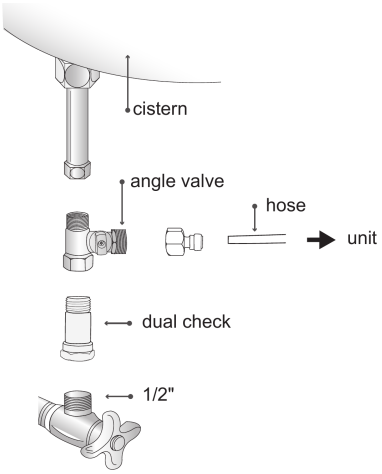

WATER CONNECTION

Install the T-valve

Fit the T-valve and dual check between the water supply and the cistern. This gives you two shut-off points for repair or removal, and the toilet still flushes as normal. **Tighten all connections with a spanner before continuing.**

4

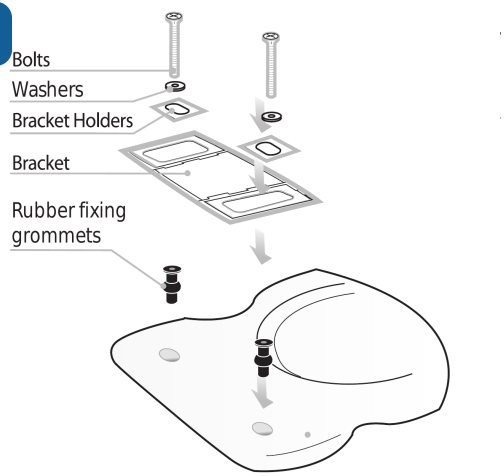

MOUNTING

Fit the mounting bracket

Fix the bracket to the toilet using the bolts, washers, bracket holders and rubber fixing grommets. Leave it loose enough for the bracket to move, and position the seat correctly before final tightening.

Note: the angle valve is not supplied. Steps may vary slightly depending on your type of toilet bowl.

Fitting & first use

Steps 5 – 8 · Fit the seat, connect the hose and power up

5

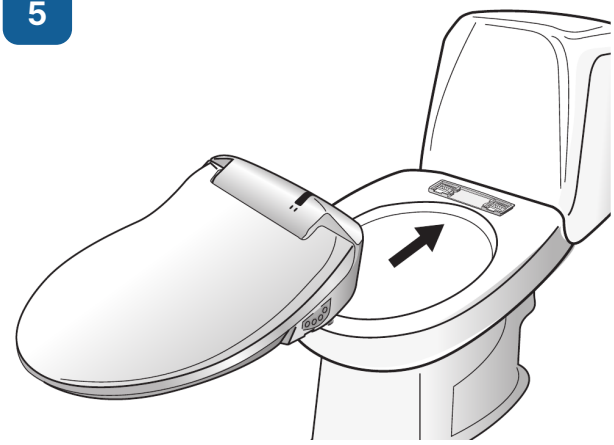

MOUNTING

Slide on the bidet seat

Centre the unit on the guide arrow and slide it onto the bracket until it **clicks** – a partially fitted seat may be damaged. Adjust front-to-back and side-to-side for balance, then tighten the nuts on both bolts securely.

6

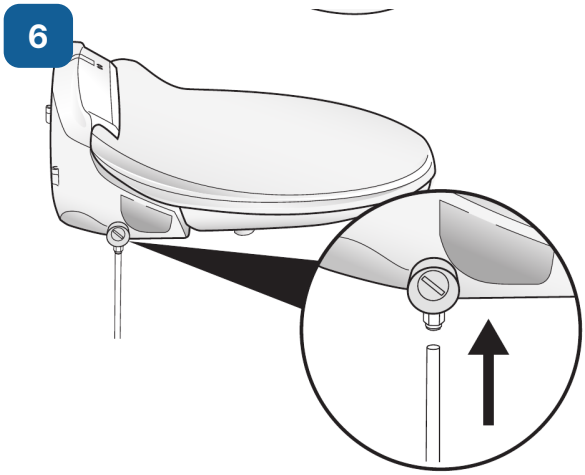

WATER CONNECTION

Connect the water hose

Push the water hose into the silver connection on the underside of the unit. A screen filter is already fitted inside the connection.

7

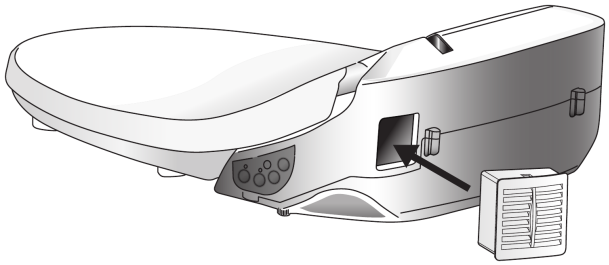

DEODORISER

Install the deodoriser

Insert the deodorising cartridge into the side of the unit. This is also where you replace the deodorising case and filter.

8

- **A** **Open the water supply**
- **B** **Plug in**
  Only once the water is on
- **C** **Wait for the beep**
  The water tank fills automatically
- **D** **Green LED turns on**
  The seat is ready to use

FIRST USE

Water on, then power

Open the water supply, then plug in. The water tank fills automatically – wait for the beep. The green LED on the unit will turn on.

Seat won't slide all the way back? See the next page to trim protection A on the underside of the unit.

If the seat won’t slide fully back

Trimming protection A on the underside of the unit

If protection A stops the unit from sliding backwards completely onto the bracket, trim it along the guideline as shown below. Work carefully with a cutter and avoid breaking the hook parts.

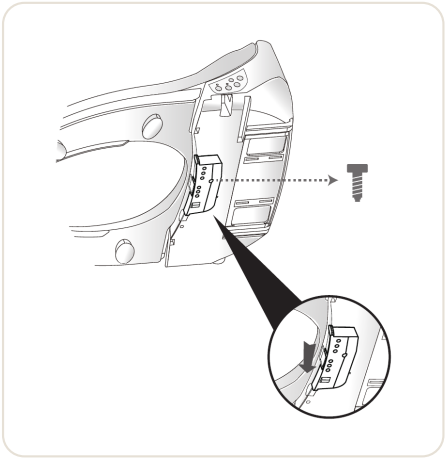

Remove protection A

1. Undo the screw.
2. Gently take protection A away, taking care not to break the hook parts.

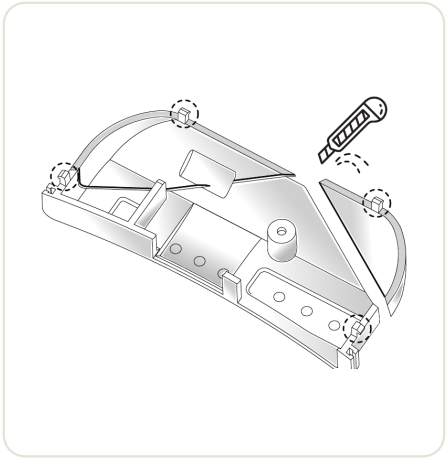

Cut along the guideline

3. Carefully cut both sides of protection A along the guideline using a cutter.

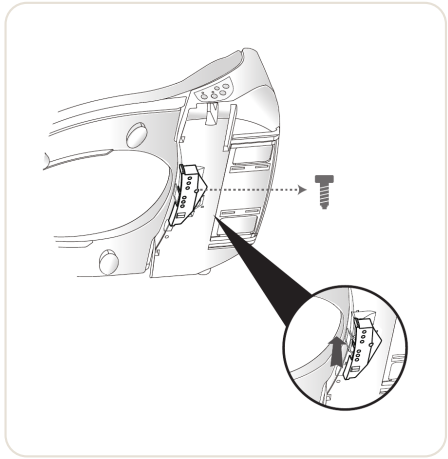

Refit protection A

4. Hook protection A back onto the bottom of the unit.
5. Refit the screw.

Hook part Guideline

Before & after

Once trimmed, the bidet seat slides further back.

BEFORE

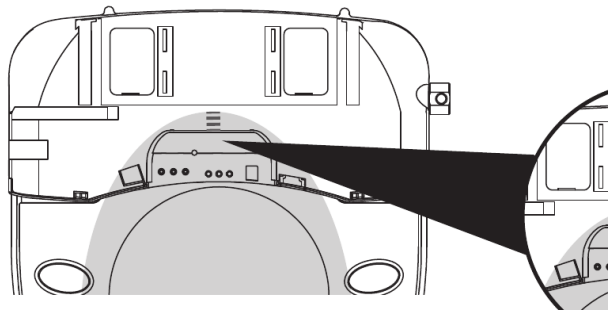

AFTER

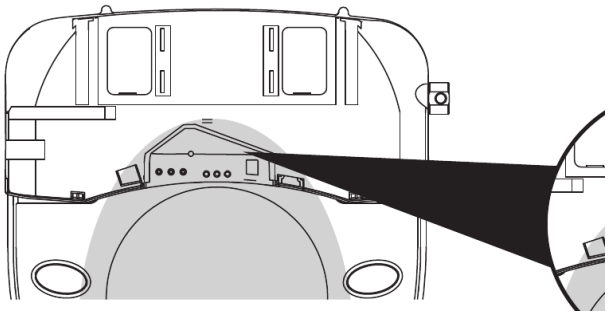

Remote control setup

Mount the bracket, fit the batteries and attach the remote

MOUNT THE BRACKET

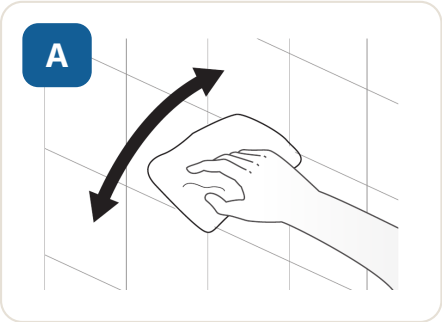

Clean the wall

Clean the area thoroughly where the bracket will be attached.

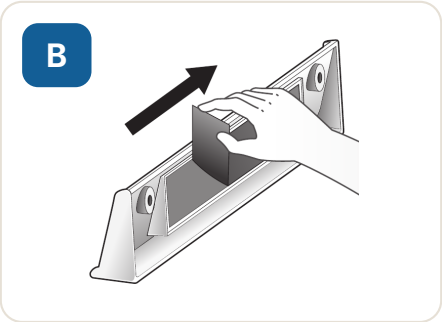

Attach the bracket

Remove the adhesive protection and stick the remote control bracket to the wall.

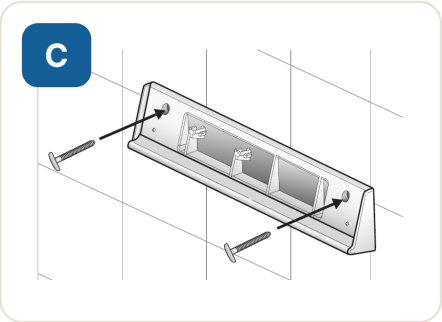

Screw fixing (optional)

Depending on the wall type, screw the bracket in directly or use the wall anchors supplied.

FIT THE REMOTE

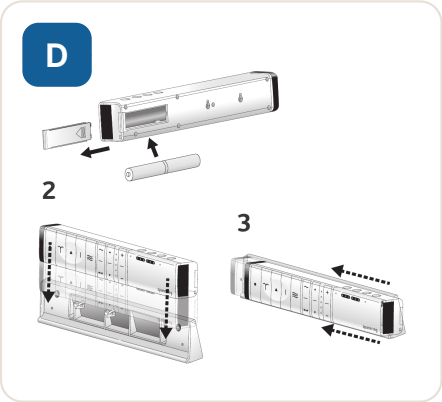

Batteries & bracket

1. Remove the battery cover and insert the batteries the right way round, then close the cover. **2.** Hook the remote onto the bracket and **3.** gently slide it left to lock in place.



Hanging option

Prefer not to drill or stick the bracket to the wall? The remote can hang from a hook using the string.

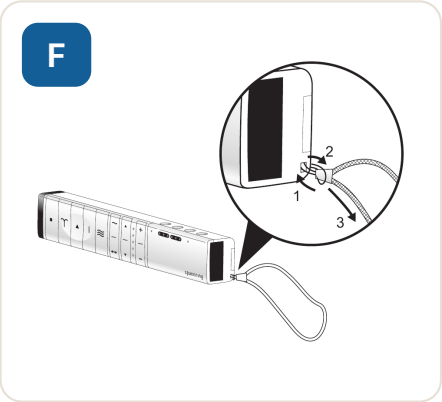

Attach the string

Thread and loop the string through the end of the remote as shown.

Important: incorrectly installed batteries can damage the remote or cause it to fail, and a poorly fitted bracket could allow the remote to fall.

Need a hand?

Our Australian team can help with installation, settings and spare parts.

1300 243 387

sales@thebidetshop.com.au